Precision and **Vacuum** Technology

PREVAC

MANIPULATORS & TRANSFERRING SYSTEMS

edition 7.5

www.prevac.eu


PRE VAC

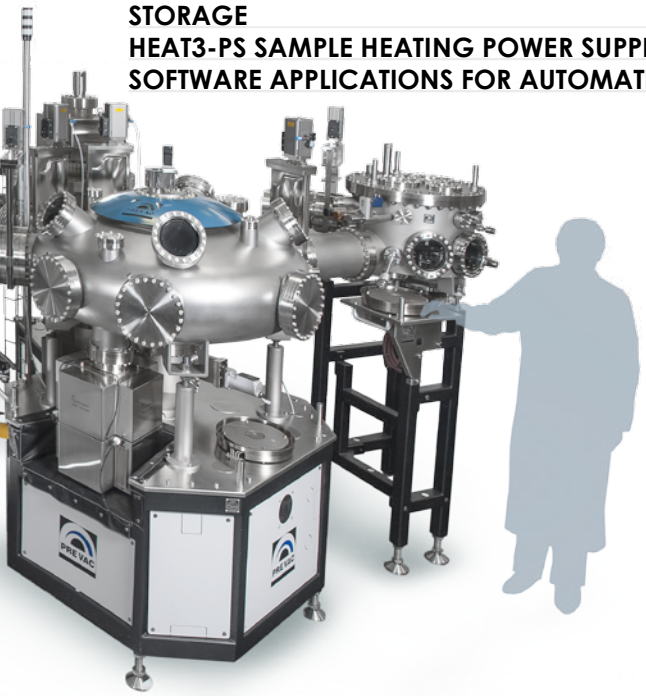

PREVAC TRANSFER SOLUTION

Many areas of research and innovation techniques require us to:

- provide smooth and precise motion in several directions,
- examine specific, small regions,
- transport hot or cold samples,
- place samples into the appropriate position for analysis,
- move the sample to another location or chamber,
- detach the sample from one device and mount it in another while maintaining UHV integrity.

SAMPLE HOLD

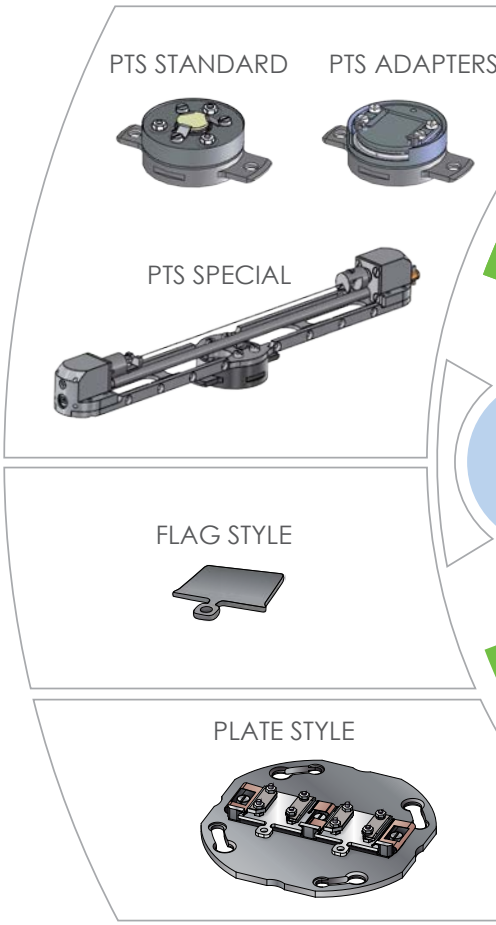

MULTI-AXES MANIPULATOR

- High precision manipulation in all directions
- Wide range of sample holders
- Wide range of temperatures, depending on application: **cooling down to 4.8 K, heating up to 2000 °C**
- Fully motorised or manual. Fully software controlled

RADIAL DISTRIBUTION CHAMBER

- **Standard** or **telescopic** transferring arm
- Base pressure: 10^{-11} mbar range. **10^{-10} mbar during transferring**
- Up to 8 transfer positions to other chambers with automatic sample positioning
- Numerous viewports
- Equipped with UHV connecting flanges and additional ports for future versatility
- Transfer mechanism with rack-and-pinion motion feedthrough
- Ball pen principle locking mechanism for PTS & Flag sample holders
- Fast and reliable transfer of both hot and cold samples
- **Transfer between the chambers less than 45 sec** (manual mode)
- Standard transfer length from 395 to 904 mm (can be customised)
- Fully motorised, semi motorised or manual. Fully software controlled and automated

LINEAR TRANSFER

- Range 320 - 1600 mm
- Smooth and fast translation movement
- Rotation
- Ball pen principle locking mechanism for PTS & Flag sample holders
- Easy operation

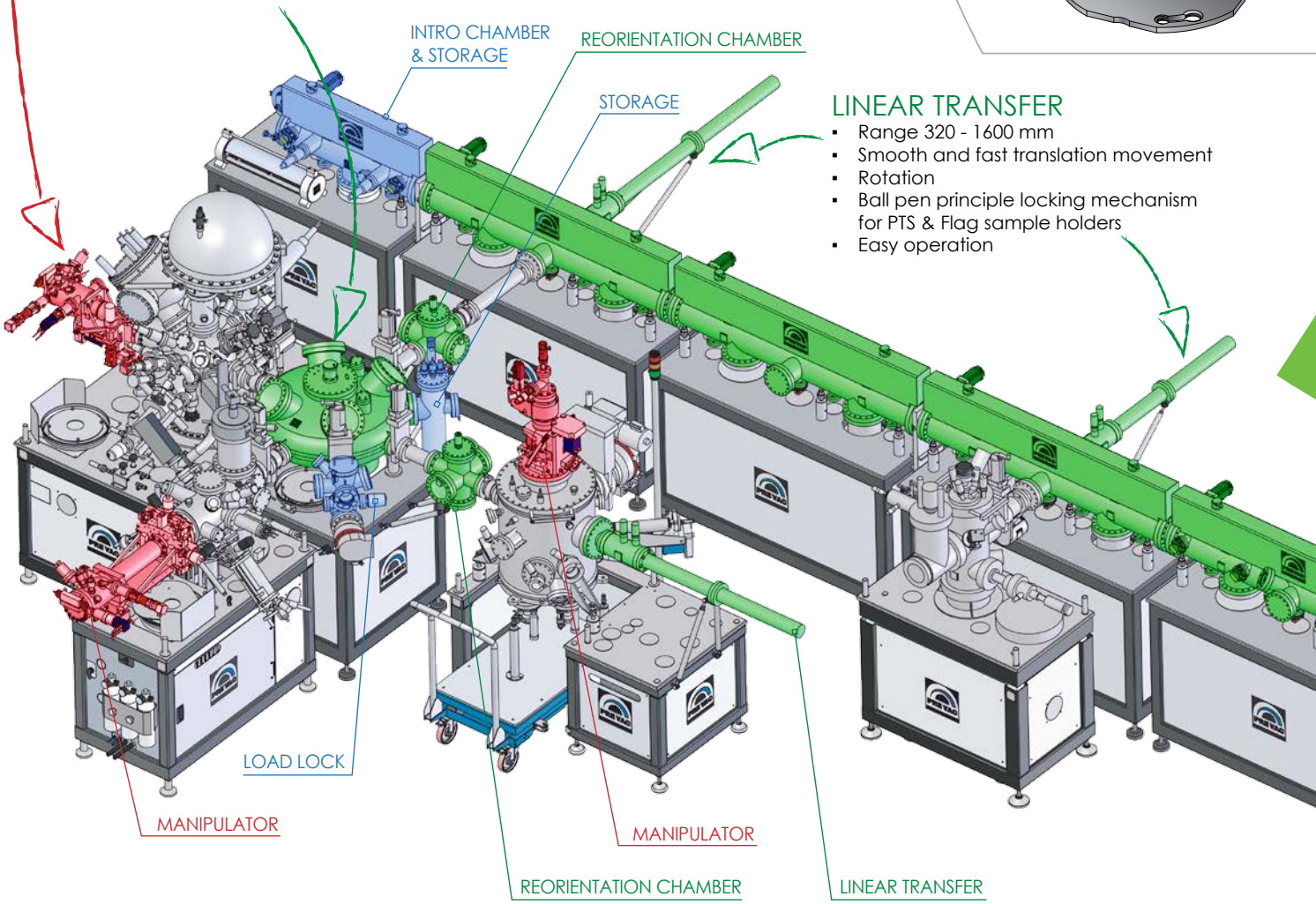

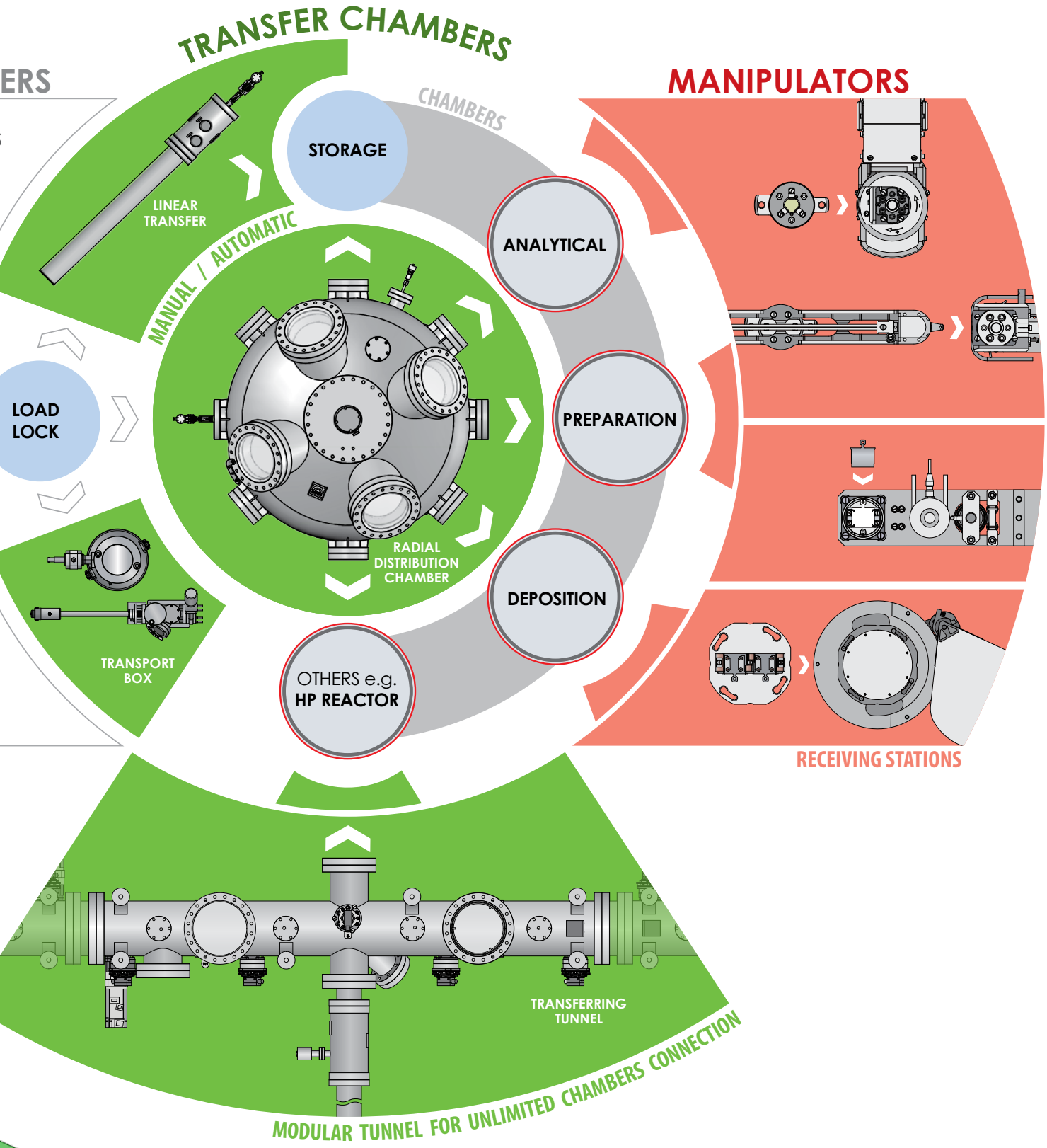

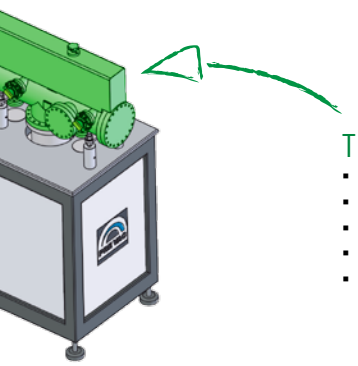

TRANSFERRING TUNNEL

- Unlimited number of sections
- Wide range of sample holders (e.g. PTS, flag style, plate style)
- Base pressure: 10^{-11} mbar range
- Fully motorised or manual versions
- Easy operation

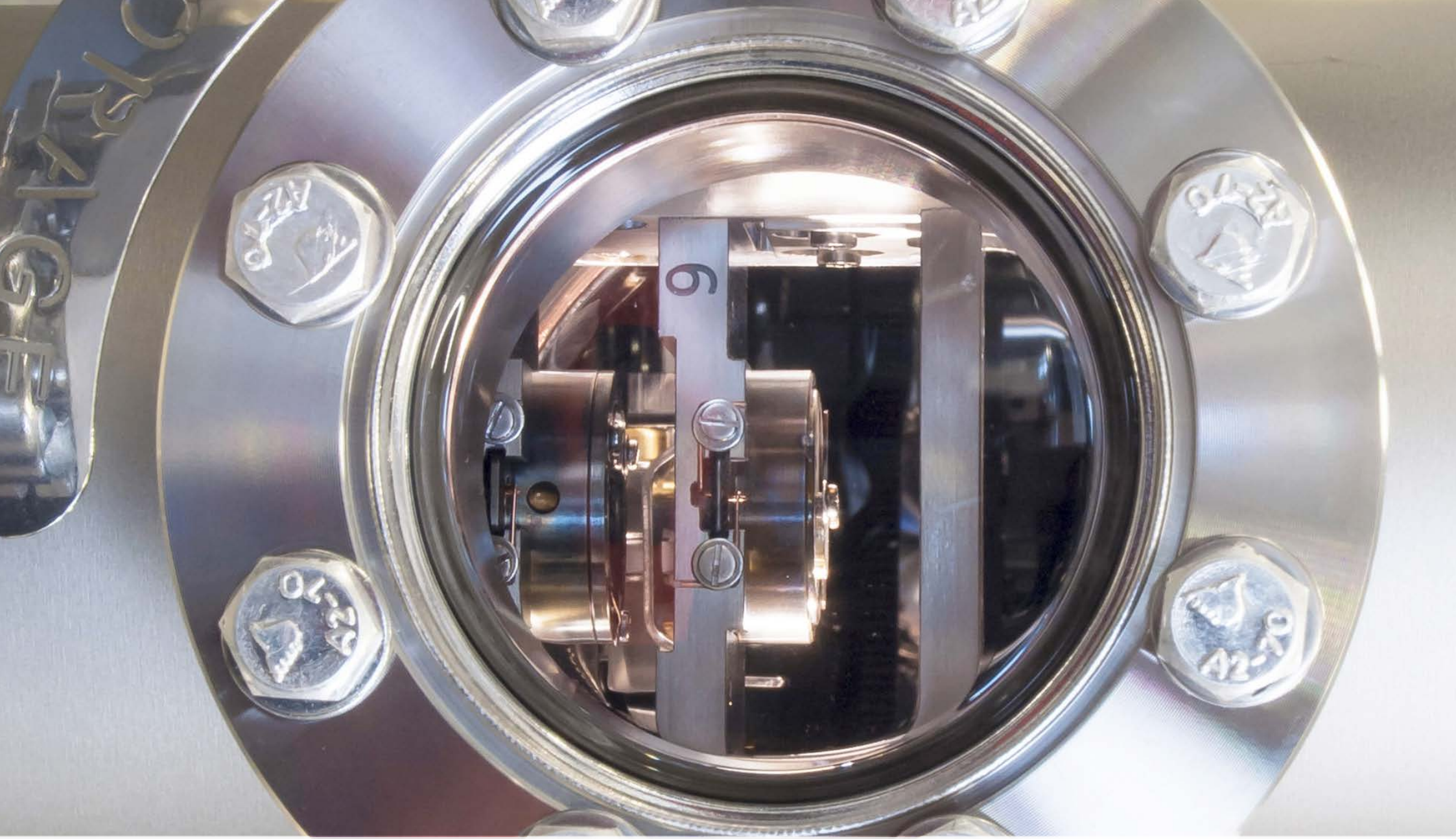

SAMPLE HOLDERS

PTS SAMPLE HOLDERS | for up to 1 inch samples

The PTS sample holder system is a transferrable sample holder for flexible surface analysis and sample preparation. It is capable of both heating and cooling the sample and can be configured with many other features depending upon the particular application. The basic holder has a thermal heat shield, cooling connection and six electrical contacts.

Key features:

- different heating methods
- detachable contacts for heating
- detachable cooling

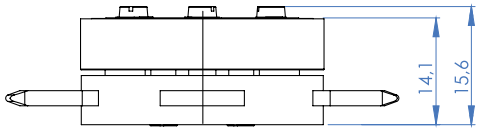

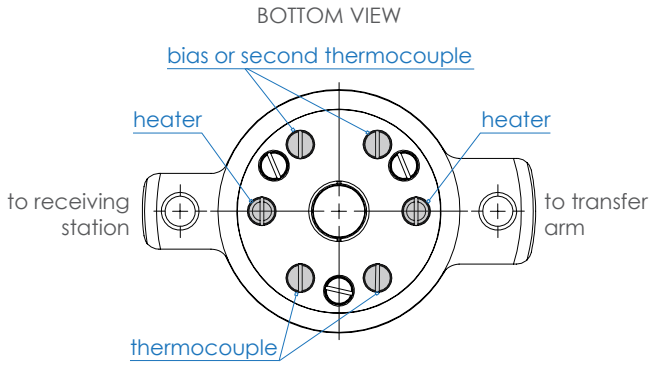

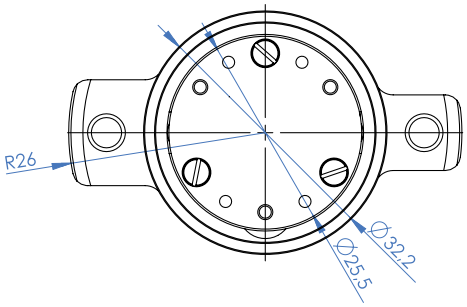

Type	without heating & cooling	with resistive heating	with EB heating	with direct heating
standard				
	for high pressure reactor	for cleaver	for SPM applications	for IR spectrometer
dedicated				
	for powder samples	with quartz balance	with Faraday cup	for 1" - 2" targets
others				
	without heating & cooling	with resistive heating	with EB heating	with direct heating
adapters for flag sample holders				

Other customized PTS sample holders with random options are available. Examples are presented below.

with angular device

with mask

with additional contacts

for HP reactor covered with Au

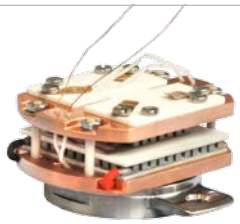

with Peltier module

PTS SAMPLE HOLDERS | for up to 1 inch samples

Type		Heating methods	Heating temp.	Cooling temp.	Thermo-couple	Table material	Options / features
standard	without heating & cooling					Ti	▪ BIAS ▪ 4 additional contacts*
	with heating & cooling	resistive	600 °C	100 K	K	Cu	▪ BIAS ▪ 4 additional contacts* ▪ suitable to work with agressive gases
		resistive	800 °C	100 K	K	SS	
		EB	900 °C	90 K	K	Cu	
		resistive	1000 °C	100 K	K	Mo	
		EB | direct	1200 °C	90 K	K	Mo	
		EB	2000 °C		C		
dedicated	for high pressure reactor	resistive	700 °C	183 K	C/K	Ti, SS, Alloy C-276, SS covered with Au	▪ suitable to work with reactive gases ▪ up to 20 bar ▪ for powder samples
	for cleaver	resistive	600 °C (1000°C on request)	100 K	K	Cu	▪ sample size: 5x5 mm, min. height 6 mm ▪ Isolated table
	for SPM applications	direct		100 K	C/K	Mo covered with NiT	▪ TIP Carrier ▪ CANTI Carrier ▪ sample cleaving
		resistive	600 °C	100 K			
		EB	1200 °C	100 K			
		EB	2000 °C				
	for IR spectrometer	resistive	600 °C 1000 °C	100 K	K	Ti, Mo, Cu	
others	for powder samples	resistive	1000 °C		K	Mo, SS	▪ no heating (Ti, SS)
	with quartz balance					SS	▪ for deposition applications ▪ quartz size: Ø 14 mm, thickness 0.28 mm
	with Faraday cup					Ti, Mo	▪ additional potential ▪ different masks
	for 1" - 2" targets					Ti, SS	▪ for PLD applications (various types of target: cuboid, irregular shape)
	customized						▪ with Peltier module
adapters for flag sample holders	without heating & cooling					Ti	▪ left or right side ▪ for 1 or 2 flag sample holders
	with resistive heating and cooling	resistive	1000 °C	100 K	K	Mo	▪ left or right side
	with EB heating and cooling	EB	2000 °C	100 K	C/K	Mo	▪ left or right side
	with direct/resistive heating and cooling	direct resistive	1000 °C	100 K	K	Mo	▪ left, right or front side
	dedicated for laser heating	laser	1000 °C		K		▪ left side*
	customized						▪ with additionial contacts ▪ for 1 or 2 flag sample holders

* require dedicated stage

Above tables shows commonly used sample holders. Approximately 200 individual designs of sample holders have been manufactured to date.

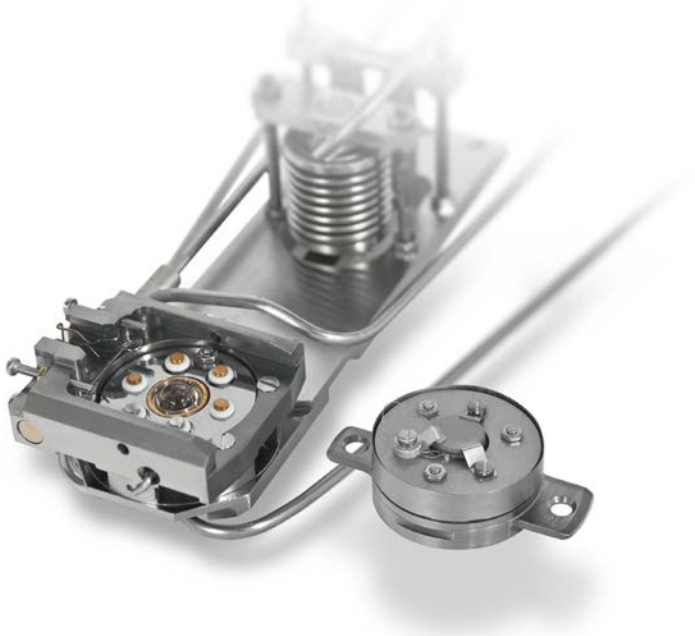

PTS SAMPLE HOLDERS | for up to 8 inch samples

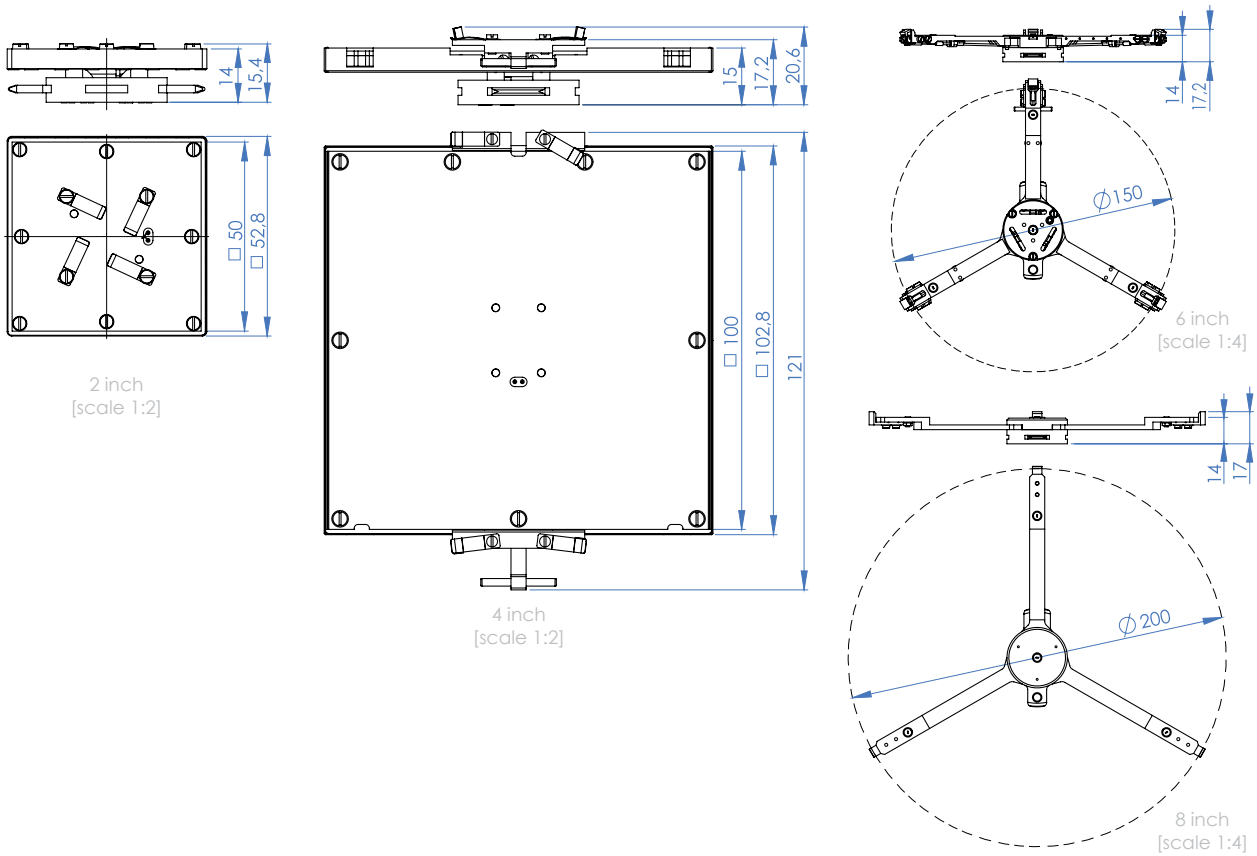

for up to 2" inch samples	for up to 4" inch samples	for up to 6" inch samples	for up to 8" inch samples
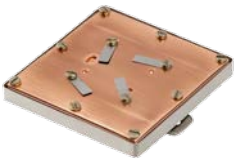	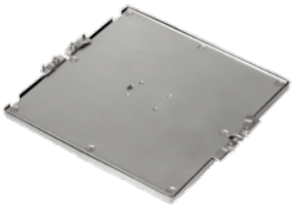		

Type		Heating methods	Heating temp.	Cooling temp.	Thermo-couple	Table material	Options / features
for up to 2" samples	without heating & cooling					Ti	▪ BIAS ▪ different mounting tables available
	with heating & cooling	resistive	600 °C	100 K	K	Cu	▪ different mounting tables available
		resistive	800 °C	100 K	K	SS | Mo	
for up to 4" samples	with heating & cooling	resistive	800 °C		K	Mo	▪ different mounting tables available
for up to 6" samples							▪ different mounting tables available
for up to 8" samples							▪ different mounting tables available
customized							e.g. for wires samples

Above tables shows commonly used sample holders. Approximately 200 individual designs of sample holders have been manufactured to date.

Other customized PTS sample holders with random options are available. Examples are presented below.

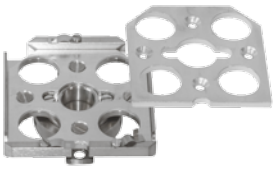

for up to 2" sample, with mask

6" plate for multiple samples mount

for wires samples (with longitudinal rotation)

PLATE STYLE SUBSTRATE HOLDERS

Substrate holders (for wafers, molyblocs) dedicated for different deposition techniques, such as MBE, magnetron sputtering, thermal evaporation and others. Available in 1", 2", 3", 4" diameter size as standard (6", 8" and larger on request).

The holder can be configured with adaptations for single and multiples of other types of sample holders, for example flag style plates. Standard material is molybdenum or titanium, other materials are available on request.

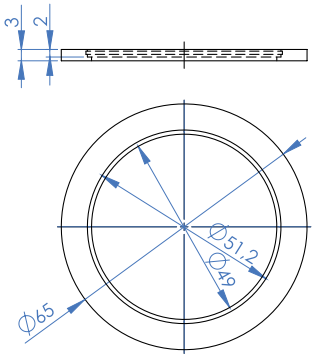

2 inch
wafer plate
[scale 1:2]

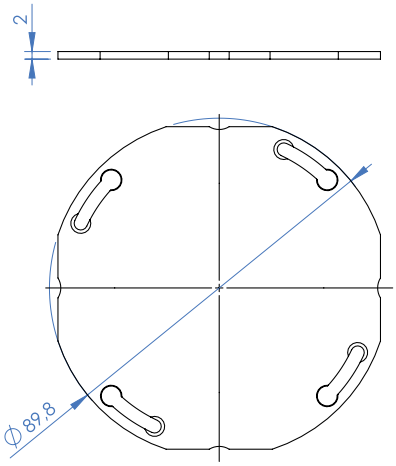

3 inch
4-holes plate
[scale 1:2]

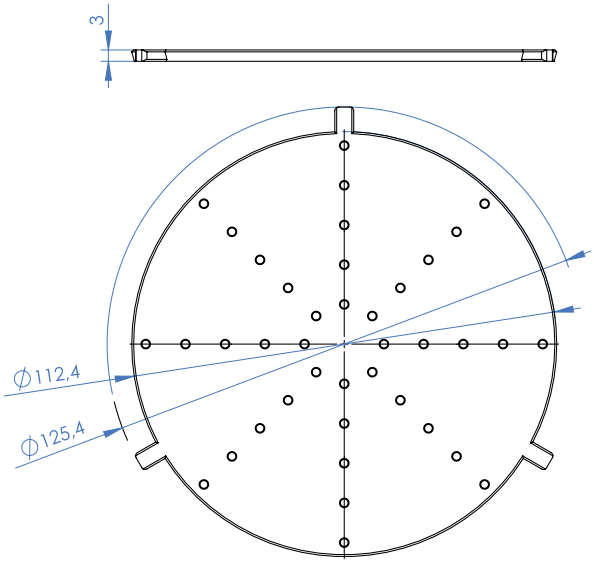

4 inch
3-pins plate
[scale 1:2]

wafer plate	4-holes plate		
	standard	with adapter for flag sample holders	with pedestal
			

3-pins plate	with masks	special design
		

Type	Size [inch]	Heating methods	Heating temperature	Holder material	Options /features
wafer plate	1, 2, 3, 4, 6, 8	resistive EB	1000 ÷ 1200 °C 1400 °C	Mo, Ti, Ta	for direct wafer mounting or for sample mounting
3-pins plate	1, 2, 3, 4, 6, 8	resistive EB	1000 ÷ 1200 °C 1400 °C	Mo, Ti, Ta	for direct wafer mounting or for sample mounting
4-holes plate standard	1, 2, 3, 4, 6, 8	resistive EB	1000 ÷ 1200 °C 1400 °C	Mo, Ti, Ta	for direct wafer mounting or for sample mounting
4-holes plate with adapter for flag sample holders	1, 2, 3, 4, 6, 8	resistive EB	1000 ÷ 1200 °C 1400 °C	Mo, Ti, Ta	adapter for 1, 2 or 3 flag sample holders
4-holes plate with pedestal	1, 2, 3, 4, 6, 8	resistive EB	1000 ÷ 1200 °C 1400 °C	Mo, Ti, Ta	
4-holes plate with masks	1, 2, 3, 4, 6, 8	resistive EB	1000 ÷ 1200 °C 1400 °C	Mo, Ti, Ta	different masks geometry possible
4-holes plate special design	1, 2, 3, 4, 6, 8	resistive EB	1000 ÷ 1200 °C 1400 °C	Mo, Ti, Ta	e.g. for small or irregular samples

NOTE | heating and cooling method and temperature depends on the manipulator

Above table shows commonly used sample holders. Approximately 200 individual designs of sample holders have been manufactured to date.

FLAG STYLE SAMPLE HOLDERS

Commonly used sample holder for a wide range of applications. Available as a simple bare plate or configurations including: with 4x M2 screws for sample fixing, plate with post/pedestal or prepared for electron bombardment, resistive or direct current heating. The holder also can be equipped with a thermocouple for accurate sample temperature measurement. Available materials: titanium, molybdenum, copper, tantalum, aluminum, stainless steel.

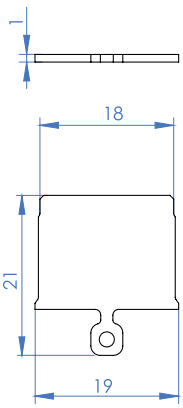

[scale 1:1]

basic	for EB heating	for DIR heating	for EB/RES heating
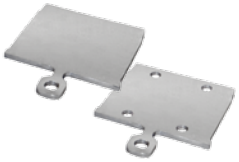			
with thermocouple	**with thermocouple, dedicated for laser heating**	**dedicated for high pressure reactor**	**special design with post/pedestal**
			

Type	Heating method	Heating temperature	Thermocouple	Table material
basic				Mo, Ta, Cu, Ti, SS
for EB heating	EB	2000 °C		Ta
for DIR heating	direct	heating with 10A		Mo, Ta
for EB/RES heating	EB / resistive	1400 °C / 1100 °C		Mo, Ta
with thermocouple			K	Mo, Ta, Cu, Ti, SS
with thermocouple, dedicated for laser heating	laser beam		K	Mo, Ta, Cu, Ti, SS
dedicated for high pressure reactor				Mo, Ta, Cu, Ti, SS
special design with post/pedestal				Mo, Ta, Cu, Ti, SS

NOTE | Cooling temperature depends on manipulator

Above table shows commonly used sample holders. Approximately 200 individual designs of sample holders have been manufactured to date.

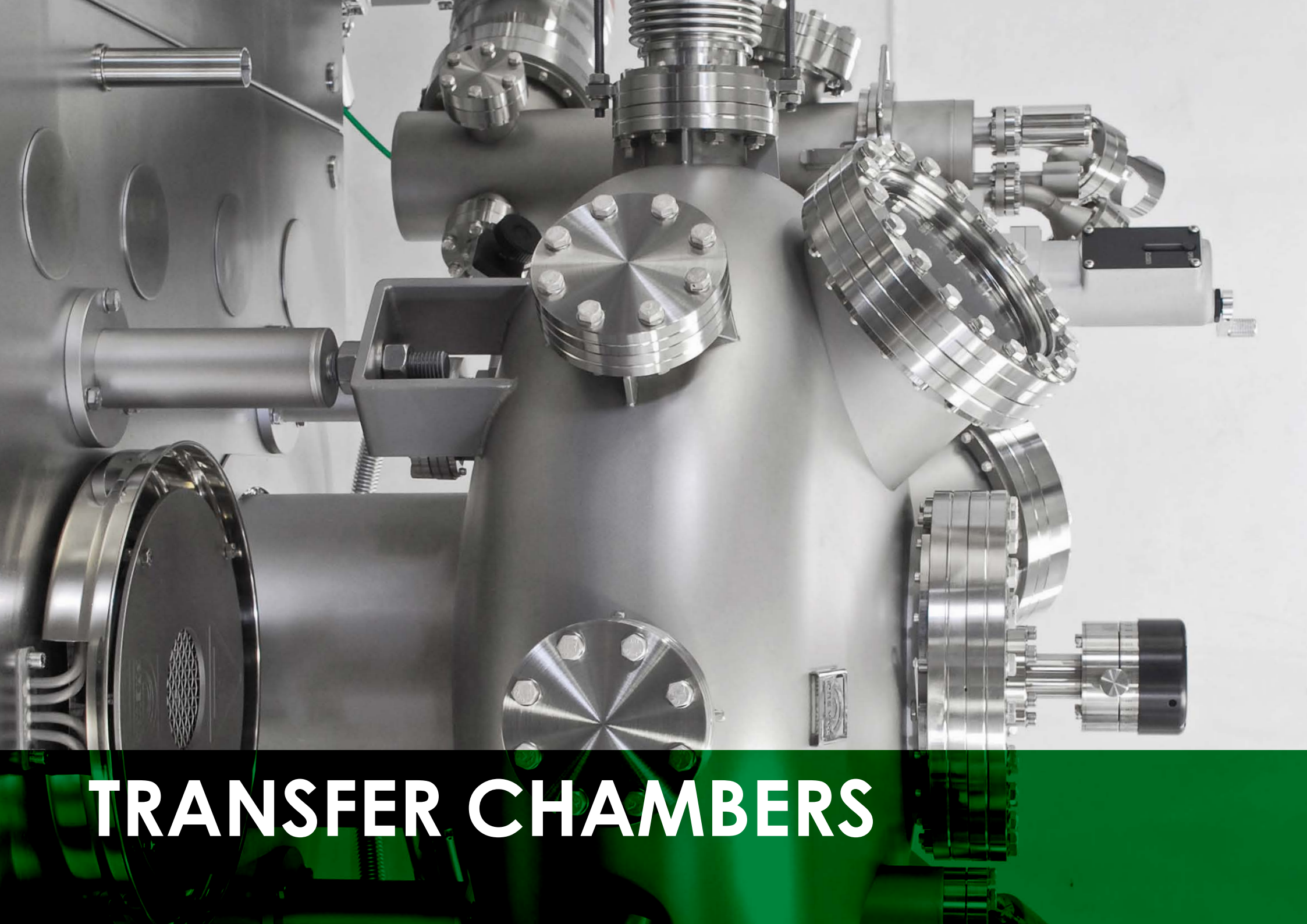

TRANSFER CHAMBERS

RADIAL DISTRIBUTION CHAMBER RDC | UFO

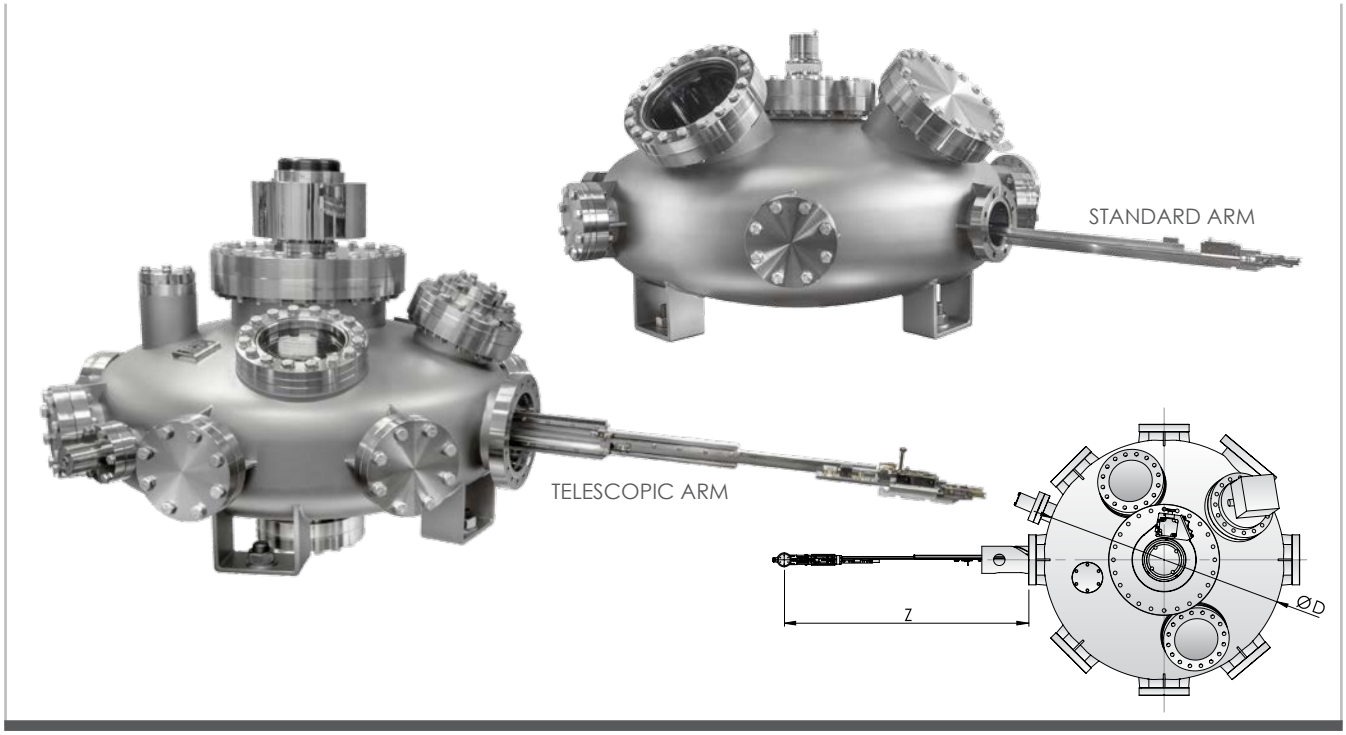

DESCRIPTION

The radial distribution chambers (RDC, UFO) are designed to transfer samples between multiple preparation and analysis chambers that are connected to it. The chambers are normally mounted at the centre of a series of chambers, acting as a central distribution hub for cluster tools.

APPLICATION

The transportation and rotating mechanism of the RDC chamber provides repeatable and accurate sample transfer to other chambers. The radial distribution chamber mechanism is a development of the linear rack-and-pinion transporter, where a single ended rack-and-pinion is precisely rotated by a precision rotary drive until it is aligned in a preset position at a radial port. Once locked into position, the same rotary drive transfers the rack out through the port.

FEATURES

- **Standard** or **telescopic** transferring arm
- Chamber body diameters from 550 to 1200 mm
- Configured with TSP and transfer mechanism with rack--and-pinion rotary motion feedthrough
- **Time to transfer between two chambers < 45 seconds (manual mode)** - fast transfer time allows cold samples to stay cold (temperature rise also depends on initial temperature and heat capacity)
- Fast and reliable drop-proof transfer of both hot and cold samples
- Up to 8 transfer positions to other UHV chambers with automatic sample positioning
- **Guaranteed base pressure: 10^{-11} mbar range** after 48h of bakeout. 10^{-10} mbar during transferring
- Numerous viewports
- Equipped with UHV connecting flanges and additional ports for future versatility

PRINCIPLES OF OPERATION

By rotating only one rotary feedthrough you can move the transfer arm in and out, rotate the sample holder around the arm axis, rotate the mechanism between transfer ports and lock/unlock the sample holder.

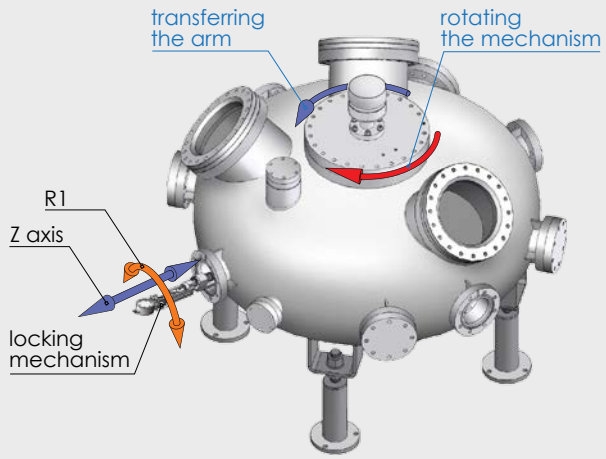

TECHNICAL DATA

Travelling flange	DN 63CF - DN 160CF
Viewport flange	DN 160CF
Chamber diameter	550 - 1200 mm (other on request)
Max transfer length Z	395 - 904 mm, depends on chamber diameter, transferring arm and sample holder type (other on request)
Positional control	manual / semi motorised (option) / motorised (option)
Bakeout temperature	up to 150 °C

OPTIONS

- R1 axis rotation (90° left, 90° right, 180°). Rotation is independent for each port.

RADIAL DISTRIBUTION CHAMBER RDC | UFO

TRANSFER LENGTH

Chamber diameter D [mm]	Maximum transfer length Z [mm]	
	for PTS (1") sample holders	for flag style sample holders
550 telescopic	555	572
700 telescopic	780	797
700	395	414
750	444	463
800	493	512
900	591	610
1000	689	708
1200	885	904

BASE PRESSURE

Base pressure: 10^{-11} mbar range (depend on pumping system). Radial distribution chamber can be equipped with application matched vacuum pumps to achieve the best pressure range.

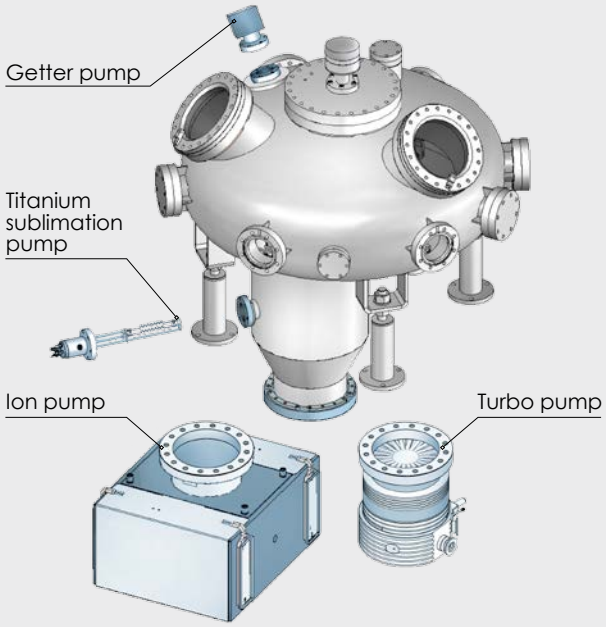

MODES OF OPERATION

- Fully motorised

- Semi motorised

- Manual

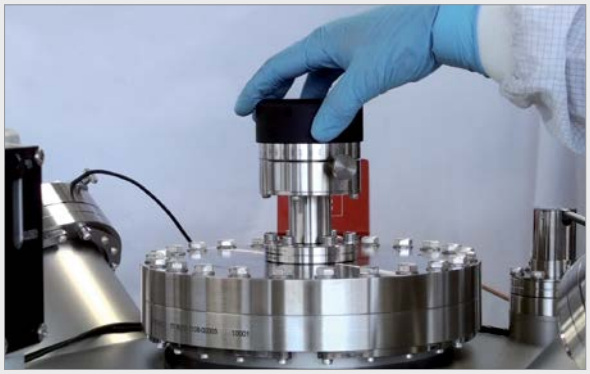

SAMPLE HOLDERS

Radial Distribution Chamber design allows to transfer a wide range of various sample holders:

- PTS, flag style, puck style, deposition or special design holders up to 8"
- with heating by direct, indirect or e-beam methods up to 2000°C
- with high cooling efficiency down to 4.8 K (LHe)
- dedicated for e.g. quartz balance, Faraday cup, high pressure reactors, powder materials, IR spectroscopy and many others

TRANSFER CHAMBERS

LINEAR TRANSFER

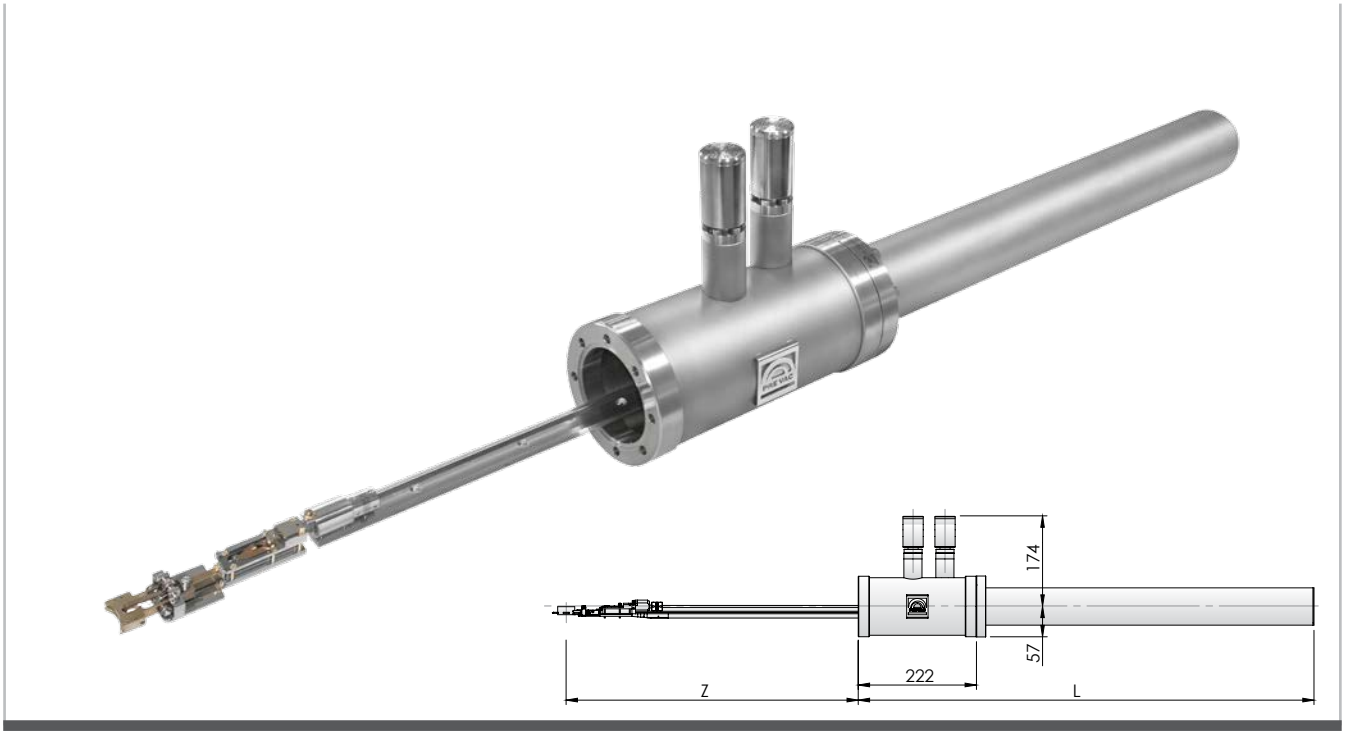

DESCRIPTION

The linear transfer is designed to transport sample holder/ sample between chambers. It is commonly used to transfer sample from load lock chamber to system main chambers. The linear transfers are pumped by the system vacuum pump set or else with a dedicated pump set. The entire movement range of the transfer mechanism is via a rotary motion feedthrough. The range of the transfer movement is from 320 to 1600 mm.
There are two types of linear transfers available:
- **1 axis** - with forward movement only
- **2 axes** - with forward movement and continuous rotation around the movement axis

PRINCIPLES OF OPERATION

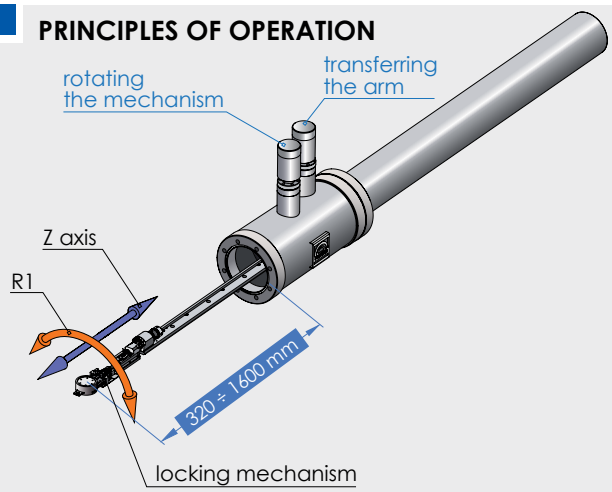

TECHNICAL DATA

Base flange	DN 63CF
Max. transfer length Z	320 - 1600 mm, depends on chamber length and sample holder type (other on request)
Transferring arm	standard / telescopic mechanism
Positional control	manual / motorised (option)
Bakeout temperature	up to 150 °C

MAXIMUM TRANSFER LENGTH

Max. transfer length Z [mm]	Housing length L [mm]
320	592
500	772
750	1022
1000	1272
1250	1522
1500	1772
1600	1872

OPTIONS

- R1 axis rotation (90° left, 90° right, 180°)

TWO SIDED LINEAR TRANSFER

Two sided linear transfer allows for transferring through linear transfer chamber in both directions. Chamber can be equipped with additional ports for connecting e.g. pump.
The range of the transfer movement is from 500 to 2000 mm.

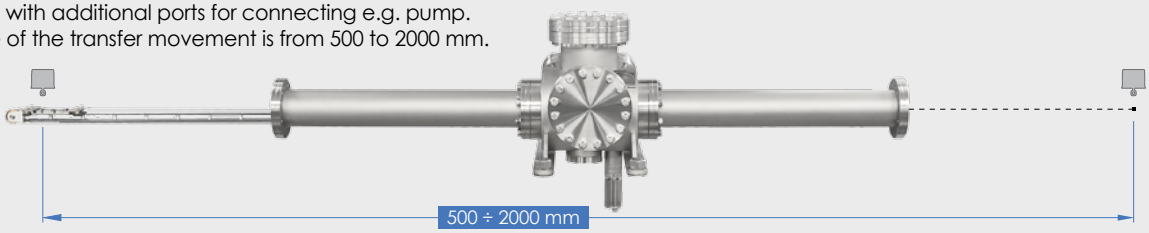

TRANSFERRING TUNNEL

DESCRIPTION

Transferring tunnel is used to transfer samples between UHV chambers, in a stable and easy-to-operate way. Up to 15 sample holders can be loaded and transferred via the dedicated sample holder trolley. The chamber is made of stainless steel and includes flanges for pump, viewports, gauges and valves. Guaranteed base pressure range 10^{-11} mbar after bakeout at 150 °C.

SAMPLE HOLDERS

A special transferring trolley is ready to contain up to 15 pcs of PTS or flag holders or 3 pcs of plate style holder.

15 x  15 x  3 x 

OPTIONS

- R1 axis rotation (90° left, 90° right). Rotation is independent for each port.

ADDITIONAL INFORMATION

The movement of a special trolley is realized through linear magnetic drive and rail transfer inside tube. All motion elements: rotary feedthrough, drive belt with set of magnets, section motor, etc. are mounted outside the vacuum in order to guarantee the best vacuum performance and for ease of service. The trolley with 15 positions for sample holders is mounted in vertical position. The trolley switches its angular position in variable sections automatically, a solution which guarantees easy operation and smooth transferring into dedicated Radial Distribution chamber.
The linear motion is fully automatic, each section includes its own optical sensor and motor to guarantee completely independent movement of each section as well as high precision and full protection of the system. The fast entry load lock chamber mechanism is used for loading sample holder cassette.

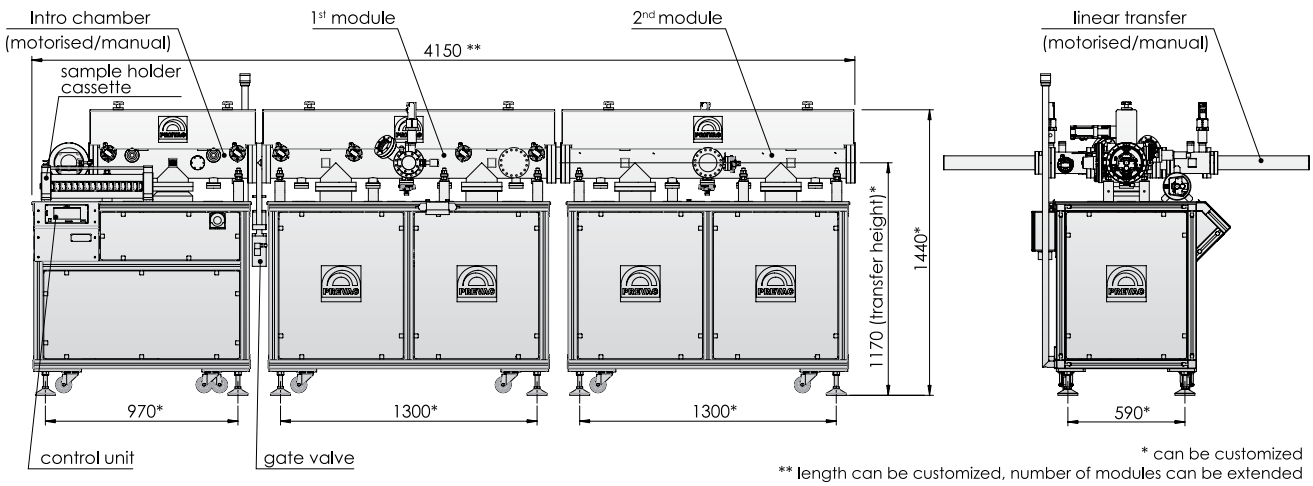

* can be customized
** length can be customized, number of modules can be extended

REORIENTATION CHAMBER

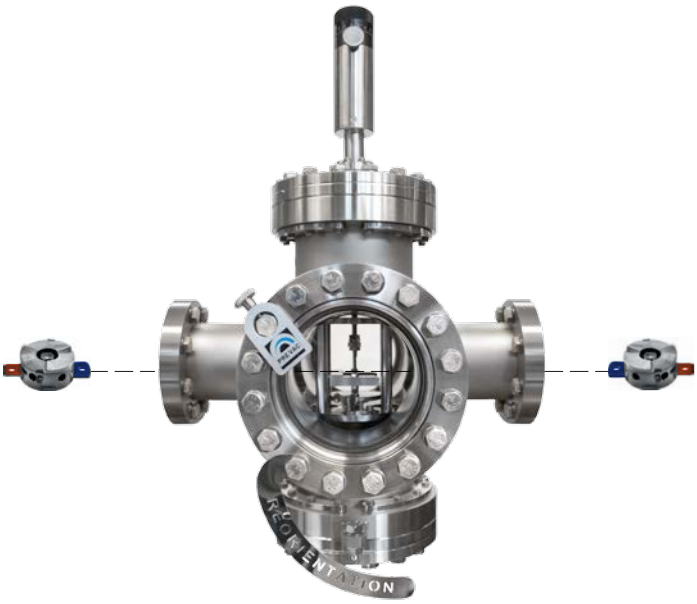

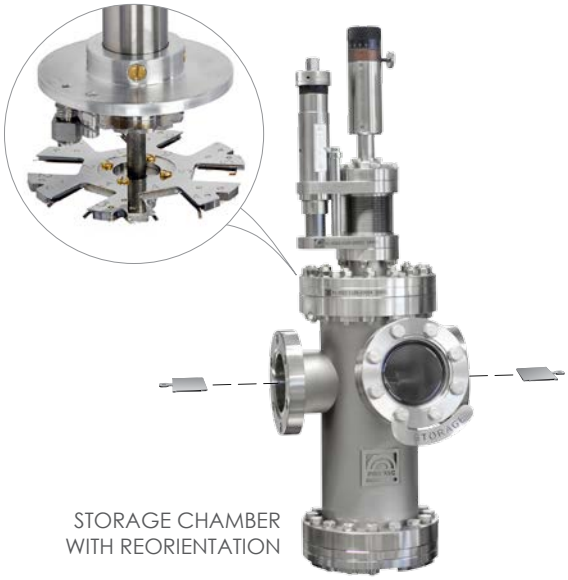

STORAGE CHAMBER
WITH REORIENTATION

DESCRIPTION

The reorientation chamber is a simple device that connects two or more chambers and contains a manual rotary reorientation mechanism that receives, reorients and transfers a sample holder from one transfer mechanism to another.

SPECIFICATION

Reorientation chambers are usually pumped via the distribution chamber pump set (independent pumping is also possible if requested). The chamber is equipped with several large viewports. Reorientation Chamber allows easy extension UHV system of every quantity of chambers.

TRANSPORT BOX VACUUM SUITCASE

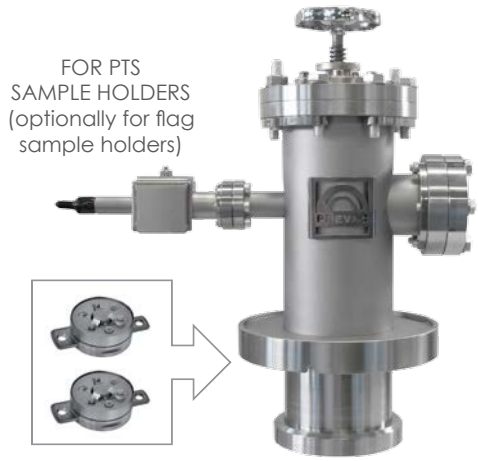

FOR PTS
SAMPLE HOLDERS
(optionally for flag
sample holders)

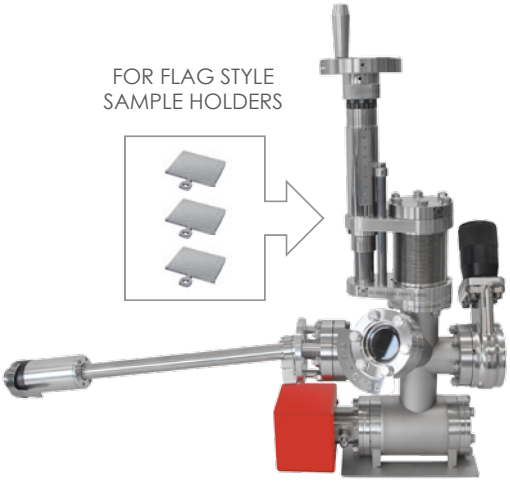

FOR FLAG STYLE
SAMPLE HOLDERS

DESCRIPTION

Transport boxes are designed for transporting samples between different UHV systems under ultra high vacuum conditions. Sample holders/samples can be stored and transported inside the transport box while maintaining UHV conditions. Vacuum is ensured by an ion pump and it's monitored by appropriate pressure gauge. The pump is designed so that it can be powered from e.g. a car battery or other power source.

PUMPING OPTIONS

- NEG Getter pump - pumping speed: 200 l/s (DN 40CF)
- ION pump - pumping speed: 3 l/s (DN 16CF)

TECHNICAL DATA

	for PTS sample holders	for flag style sample holders
Weight	~7 kg (8 kg with power supply)	~12 kg (13 kg with power supply)
Pressure range	down to $1x10^{-9}$ mbar	down to $1x10^{-10}$ mbar
Mounting flange (transferring port)	PTS dedicated load lock connection port	DN 40CF
Storage	up to 2 sample holders	up to 3 sample holders

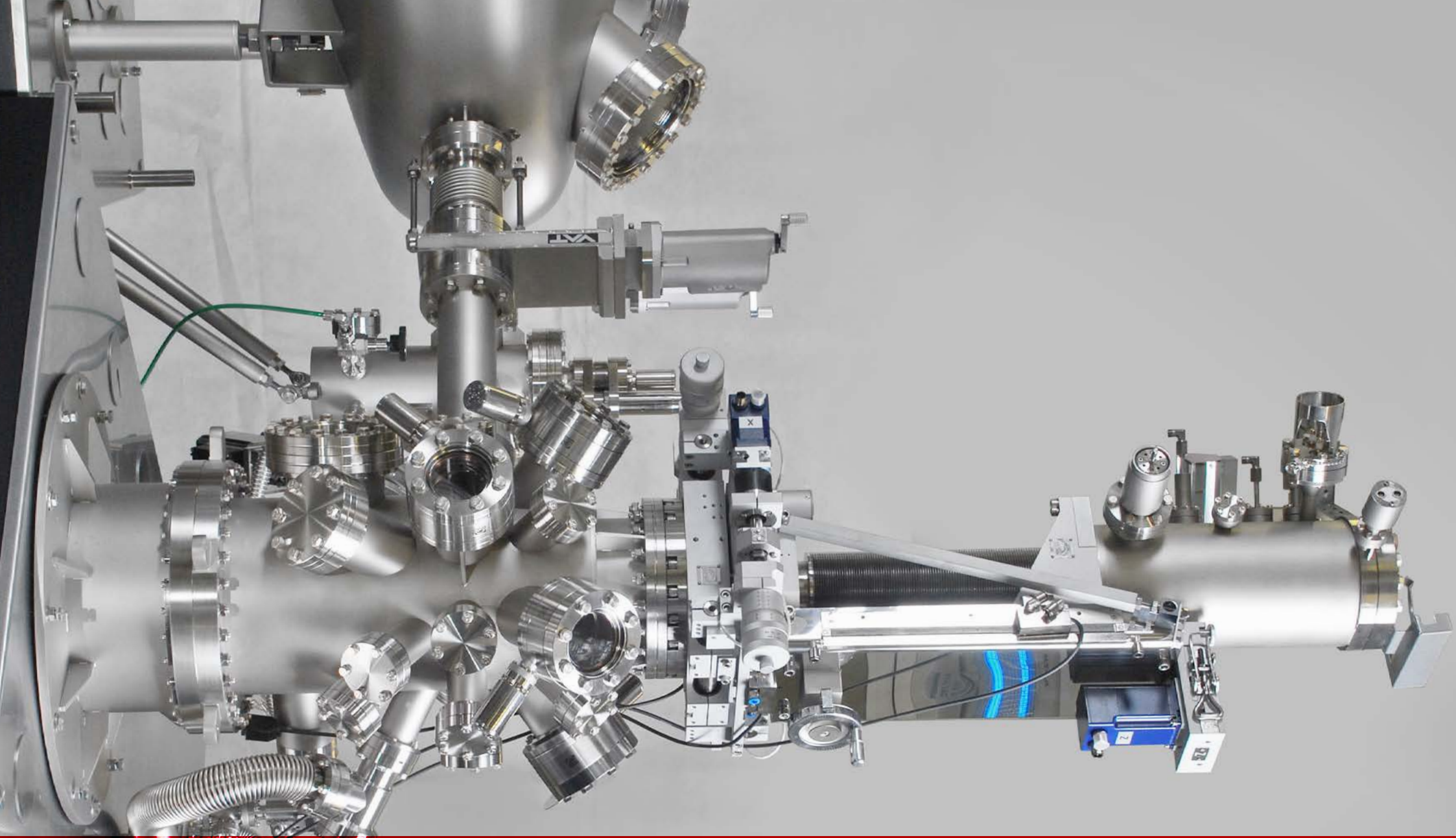

MANIPULATORS

MANIPULATORS

The manipulators are used for manipulating sample holders and scientific tools with respect to a sample's position. These manipulators, when combined with sample holders, allow precise placement and manipulation of samples in UHV environments. Manipulator equipment is designed to be modular for convenience and to achieve total flexibility. The individual modules, such as the Z Slide, XY Stage, rotary feedthroughs and motorization modules are compatible to allow complex applications to be built up from a range of simple units.

DEGREES OF FREEDOM

Analytical and **preparation** manipulators

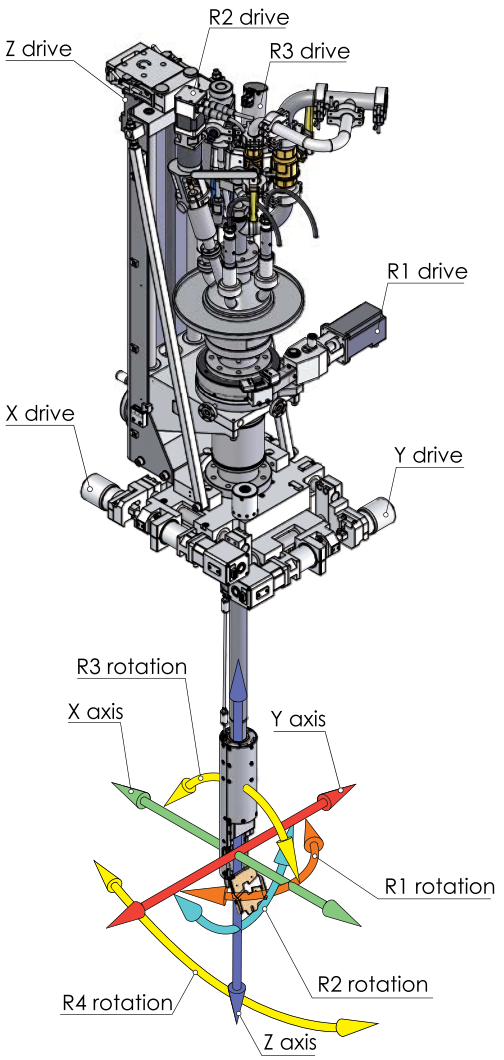

Deposition manipulators family

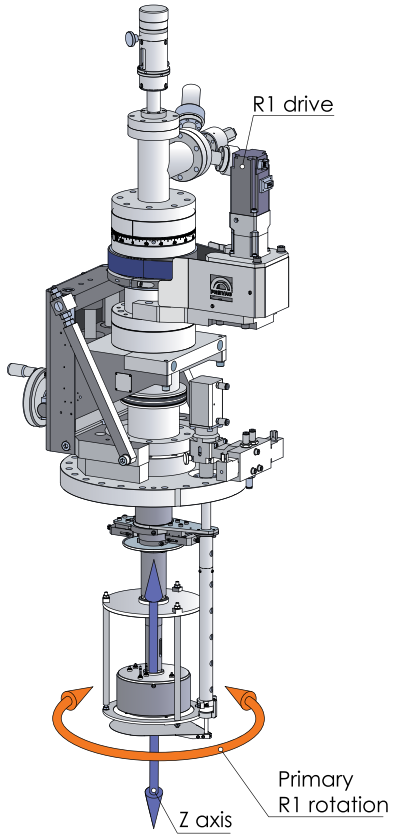

ROTATING AXES DESIGNATIONS

Around Z axis	R1	Primary	Polar	Theta
Around Y axis	R2	Azimuthal	Phi	Alpha
Around X axis	R3	Tilt	Flip	Beta
Around X axis	R4	Tilt	Flip	Beta

EXAMPLES OF RECEIVING STATIONS

for **standard PTS** sample holders

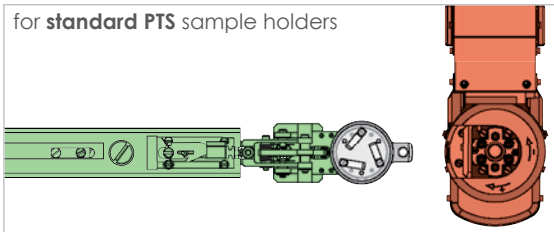

for **special PTS** sample holders

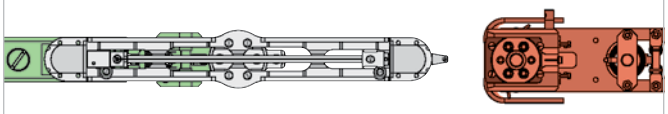

for **flag style** sample holders

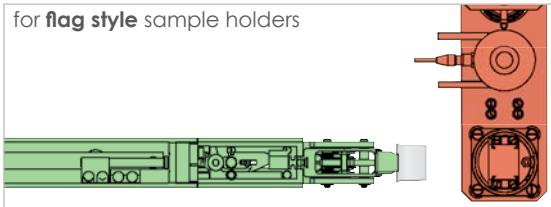

for **plate style** (molyblocs, wafers) sample holders

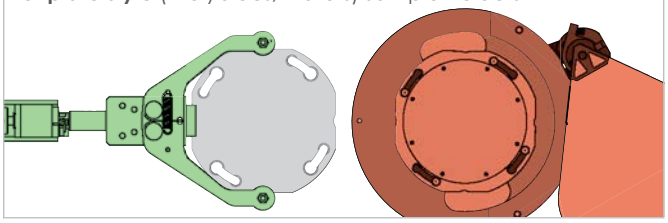

MODULAR CONCEPT

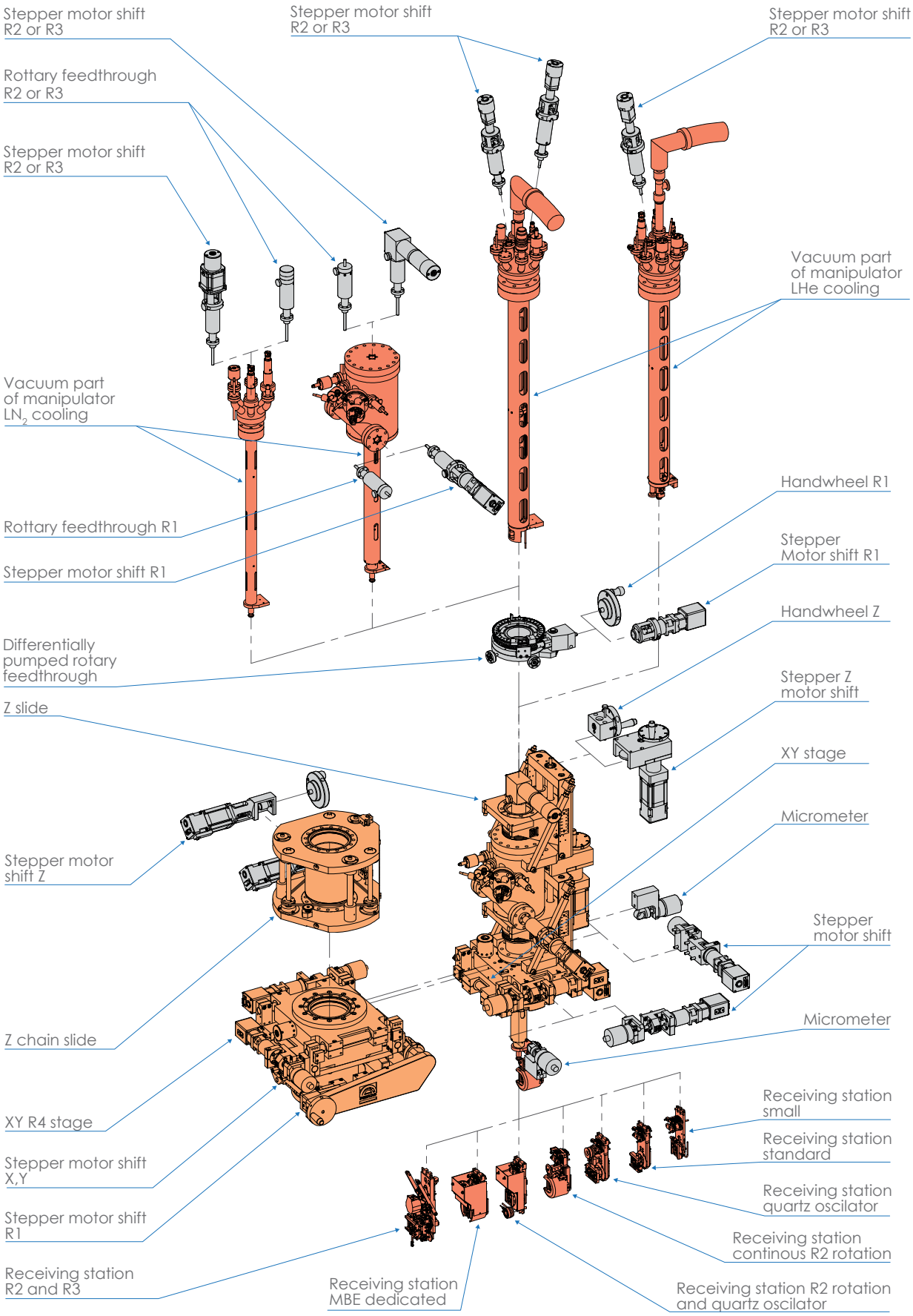

XY STAGE

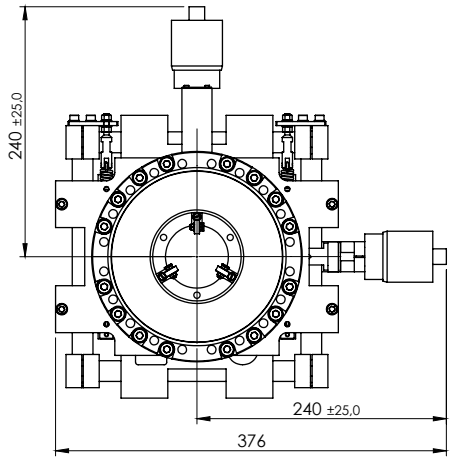

example drawing
(XY stage DN 160/63CF)

DESCRIPTION

The XY stage is a precision, high rigidity UHV specimen translator having X and Y motions. The standard mounting flange is DN 160CF. A DN 100CF mounting flange version is also available. The stage can work in any orientation.

APPLICATION

The XY stages has been designed for ease and convenience of use. X and Y movement are ± 25.0 mm, depending on the accessories that are fitted. They can also be used to reposition a chamber port with an axis that is parallel to, but slightly off, the desired direction. In this last usage it is sometimes referred to as an XY adjuster and is a very economical alternative to other devices.

MAXIMUM XY RANGES

Base flange	Travelling flange	Ø B [mm]	X, Y range [mm] ○	X, Y range [mm] ▢
DN 100CF	DN 63CF	Ø 38	± 25	± 17.5
DN 100CF	DN 100CF	Ø 62	± 12.5	± 9
DN 160CF	DN 63CF	Ø 38	± 25	± 17.5
DN 160CF	DN 100CF	Ø 75	± 25	± 17.5

○ - real stroke (circle) ▢ - real stroke (square)

XY STAGE DN 160/100CF RANGES

$\frac{(ØA - ØB)}{2}$ = real stroke (circle)	Ø B [mm]		
	Ø 50	Ø 80	Ø 100
DN 160/100CF XY ± 12.5 mm mounting flange bore ØA=125 mm	± 12.5	± 12.5	± 12.5
DN 160/100CF XY ± 25.0 mm mounting flange bore ØA=125 mm	± 25	± 22.5	± 12.5
DN 160/100CF XY ± 25.0 mm mounting flange bore ØA=152 mm	± 25	± 25	± 25

TECHNICAL DATA

Base flange	DN 100CF or DN 160CF
Travelling flange	DN 63CF or DN 100CF
Max free diameter	102 mm
X, Y range	± 12.5 mm or ± 25 mm
Positional control	micrometer / stepper motor (option)
Resolution (manual/motorised)	5 µm / 1 µm
Bakeout temperature	up to 150 °C

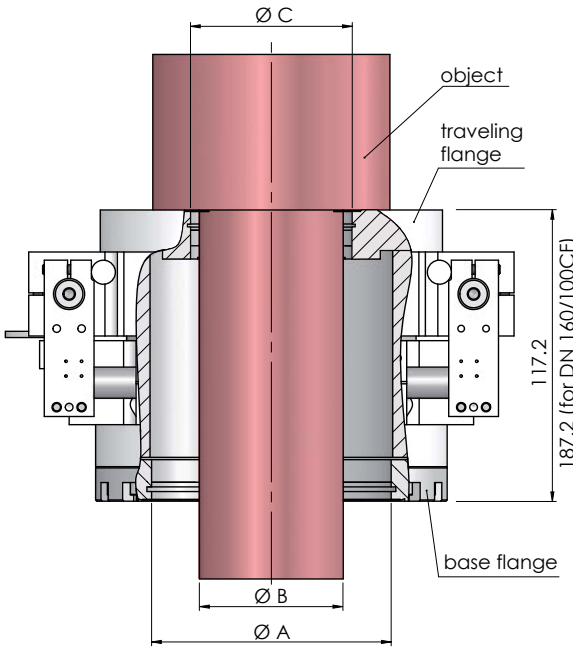

XY stage section

Z SLIDE

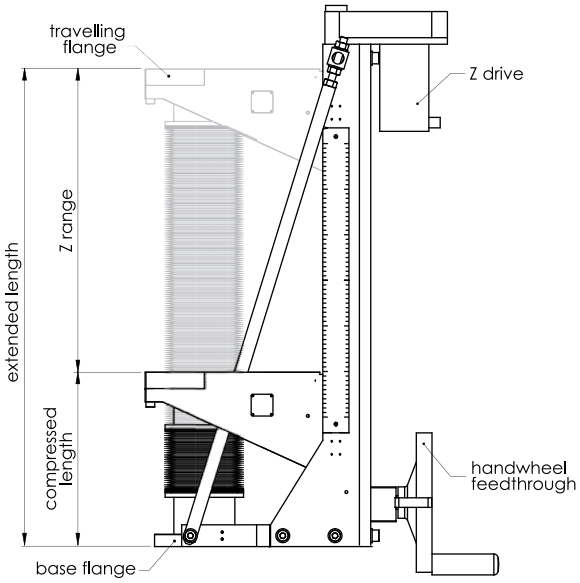

example drawing
(Z slide DN 63/63CF)

DESCRIPTION

The Z slide is a precise, high rigidity UHV specimen translator having Z motion. The travelling flange can be chosen depending on the type of accessories. The translator is suitable for vertical or horizontal mounting.

APPLICATION

The Z slides have been designed for ease and convenience of use. Z movement is 75 - 800 mm, depending on application. These translators provide greater linear travel than is available from the linear shifts.

COMPRESSED / EXTENDED LENGTH

Compressed / extended length [mm]

Z range [mm]	Bellow ID39		Bellow ID65		Bellow ID102
	DN 40/40CF	DN63/40CF DN100/40CF	DN63/63CF	DN100/63CF	DN100/100CF
75	142 / 217	148.5 / 223.5		211 / 286	
100	142 / 242	148.5 / 248.5		211 / 311	
150	142 / 292	148.5 / 298.5		211 / 361	
200	142 / 342	148.5 / 348.5		211 / 411	
250	142 / 392	148.5 / 398.5		211 / 461	
300	142 / 442	148.5 / 448.5		211 / 511	
350	207 / 557	213.5 / 563.5		211 / 561	
400	207 / 607	213.5 / 613.5		211 / 611	
450	207 / 657	213.5 / 663.5		211 / 661	
500	207 / 707	213.5 / 713.5		211 / 711	
600	272 / 872	278.5 / 878.5		276 / 876	
700	272 / 972	278.5 / 978.5		276 / 976	
800	272 / 1072	278.5 / 1078.5		276 / 1076	

TECHNICAL DATA

Standard base flange	DN 40CF, DN 63CF or DN 100CF
Standard travelling flange	DN 40CF, DN 63CF or DN 100CF
Z range	75 - 800 mm (standard, other on request)
Z motion control	handwheel / stepper motor (option)
Resolution (manual/motorised)	500 µm / standard 10 µm (1 µm on request)
Bakeout temperature	up to 150 °C

ADDITIONAL INFORMATION

The Z slides are mostly used together with XY stages. After combining the Z slide with an XY stage we get the XYZ stage with three degrees of freedom. The Z slide can also be fitted with a stepper motor as required.

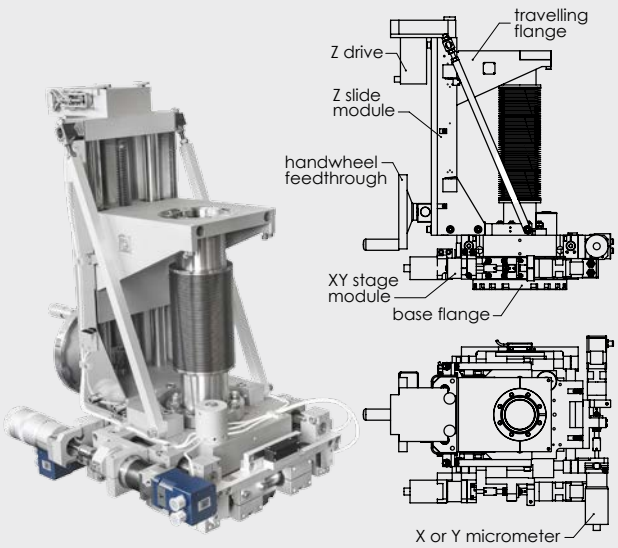

Z CHAIN SLIDE

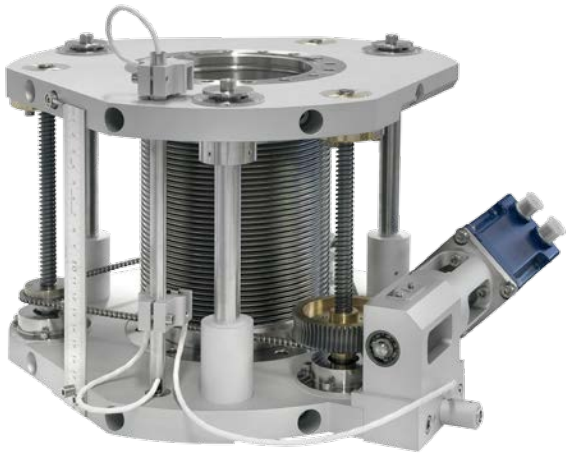

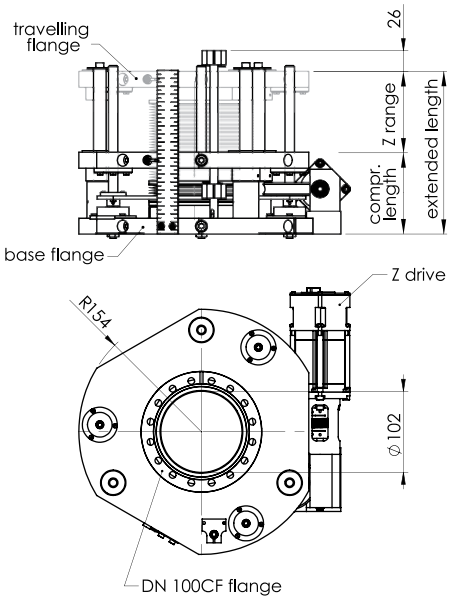

example drawing
(Z chain slide DN 100/100CF)

DESCRIPTION

The Z chain slide provides short strokes of Z travel with a wide range of bellows I.D. The slide is provided through three lead screws which are synchronously driven by a drive chain. Manual operation is provided by a handwheel assembly operating through a wormdrive reduction system.

APPLICATION

The Z chain slides are heavy duty translators designed to move heavy objects accurately in and out of the vacuum system. They are well suited to applications involving equipment insertion and withdrawal from points where space is restricted.

COMPRESSED / EXTENDED LENGTH

	Compressed length [mm] Extended length [mm]	
Z range [mm]	Bellow ID102 DN 100/100CF	Bellow ID156 DN 160/160CF
100	104.5 204.5	96 196
200	125 325	122.5 322.5
300	141 441	150 450

TECHNICAL DATA

Base flange	DN 100CF or DN 160CF *
Travelling flange	DN 100CF or DN 160CF *
Z range	100 - 300 mm
Z motion control	handwheel / stepper motor (option)
Resolution (manual/motorised)	50 µm / standard 10 µm (1 µm on request)
Bakeout temperature	up to 150 °C

* other on request

ADDITIONAL INFORMATION

Z chain slides are often integrated with an XY stage. The unit is intended primarily for vertical operation with the load supported on the Z axis. For alternative orientations please contact our technical department. The Z chain slide can be motorised with the stepper motor shift.

LINEAR SHIFT

STANDARD

STANDARD (with double guided below)

HIGH STABILITY

WITH TILT

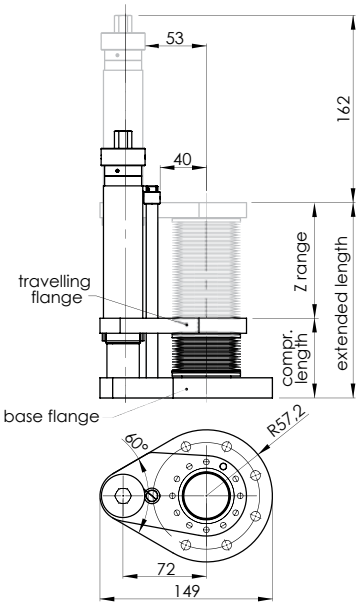

example drawing
(standard linear shift DN 63/40CF)

DESCRIPTION

The linear shift is a UHV transfer mechanism that is fabricated from a pair of flanges, connected by an edge welded bellows. The free flange moves towards the fixed flange in a controlled, precise motion whilst maintaining parallelism. Its action is similar to the Z slide manipulator, but with slightly reduced travel length and overall positioning resolution. The standard mounting flange is DN 40CF or DN 63CF. The shift is actuated by a handwheel and can work in any orientation.

APPLICATION

The linear shifts are used in applications that don't require the higher precision and graduated movement of other linear motion devices. They are normally used for:

- manipulation of surface science tools with respect to the sample position
- manipulation of evaporation and sputter sources
- manipulation of electron and x-ray sources
- manipulation of quartz oscillators
- sample transfer applications

TECHNICAL DATA

Base flange	DN 40CF or DN 63CF
Travelling flange	DN 40CF
Z range	25, 50, 75, 100 or 150 mm
Bellows ID	38.5 mm
Positional control	handwheel / motorisation (option)
Resolution	1 mm
Repeatability	1 mm
Bakeout temperature	up to 150 °C
Tilt range (LS with tilt)	± 4°

ADDITIONAL INFORMATION

The linear shifts are designed for the linear movement of instruments with minimum tilt or wobble in the movement, maintaining precision alignment before and after pump-down.

COMPRESSED / EXTENDED LENGTH

Compressed length [mm]
Extended length [mm]

Z range [mm]	Standard			High stability		with tilt	
	DN 40/40CF	DN 63/40CF	DN 40/40CF double guided below	DN 40/40CF	DN 63/40CF	DN 40/40CF	DN 63/40CF
25	45 70	47.5 72.5	- -	- -	47.5 72.5	- -	- -
50	51 101	55 105	- -	- -	60.7 110.7	- -	- -
75	53 128	60 135	- -	54.3 129.3	- -	65 140	- -
100	65 165	69 169	- -	65 165	69 169	66 166	57 157
150	- -	- -	80 230	- -	- -	- -	- -

DIFFERENTIALLY PUMPED ROTARY FEEDTHROUGH DPRF

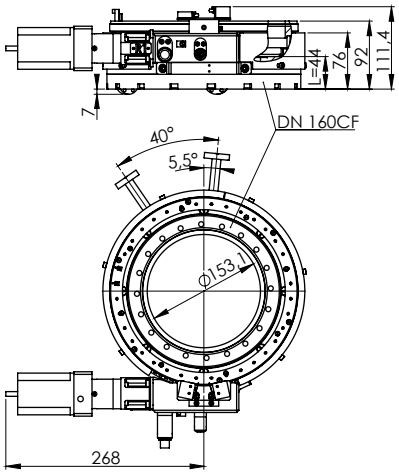

example drawing
(DPRF DN 160CF)

DESCRIPTION

The differentially pumped rotary feedthrough provides 360° of continuous rotary freedom through the vacuum wall of a UHV system. The feedthrough has two stages of differential pumping isolated by graphite-impregnated, expanded viton seals on special sealing surfaces. A pre-loaded ball bearing set accurately controls the rotating stage position.

APPLICATION

The differentially pumped rotary feedthrough can be combined with manipulators and any other precision positioning devices.

DIAMETER & DISTANCE BETWEEN FLANGES

Base flange	ID [mm]	distance L [mm]
DN 40CF	41	37
DN 63CF	66	48.4
DN 100CF	103	47
DN 160CF	153.1	44

TECHNICAL DATA

Base flange	DN 40CF, DN 63CF, DN 100CF, DN 160CF
R1 rotation control	handwheel / stepper motor (option)
Resolution (manual/motorised/ external optical encoder)	1° / 0.1° / 0.05°
Bakeout temperature	up to 150 °C

ADDITIONAL INFORMATION

- The feedthroughs are equipped with worm drive providing fine angle adjustment. They are available with an anti-backlash stepper motor.
- Different motors or motor control systems available (stepper motors, servomotors, IcePAP).

R2/R3 TILT MODULE (combined with XY stage)

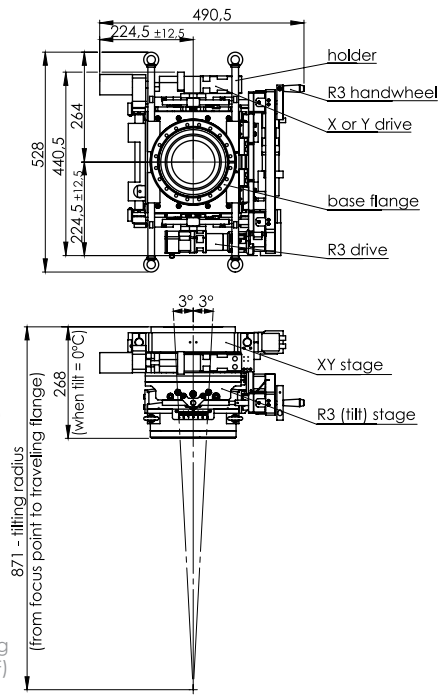

example drawing
(R3 tilt module DN 160/100CF)

DESCRIPTION

The R2/R3 tilt module provides short inclination in relation to one of the orthogonal directions (X or Y axis) in the ± 3° range. Integration with XY stage (through a common bellows) is recommended for best motion range. Module geometry is customized in order to maintain the radius of rotation around the focus point and other customer requirements. The R2/R3 rotation can be motorised or manual.

APPLICATION

The R2/R3 tilt module has been designed to achieve the best angular resolution, thanks to a large radius of rotation. In addition the rigid design allows attachment of heavy loads to the end-effector. Another advantage of this solution is the lack of mechanical parts on the vacuum side. The functionality can be extended by changing the arrangement of chosen modules (R2 tilt, R3 tilt, R1 rotation, XY stage, Z slide).

TECHNICAL DATA

Base flange	DN 160CF
Travelling flange	DN 100CF, DN 63CF
R3 range	± 3°
R3 motion control	handwheel / stepper motor (option)
Resolution (manual/motorised)	0.1° / 0.01°
Bakeout temperature	up to 150 °C

ADDITIONAL INFORMATION

R2/R3 tilt modules are often integrated with an XY stage and Z chain slide (or Z slide). For alternative configuration please contact our technical department.

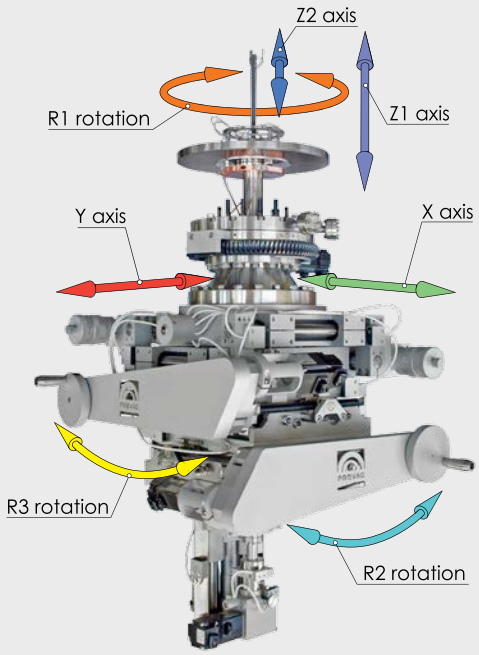

XYZ MINI MANIPULATOR

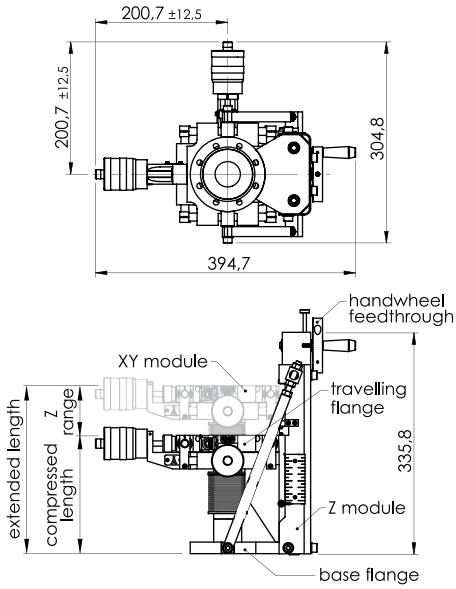

example drawing
(XYZ mini manipulator DN 100/40CF)

DESCRIPTION

The XYZ mini manipulator is a precision, high rigidity UHV specimen translator having X, Y and Z motions. The standard mounting flange is DN 63CF and the standard travelling flange is DN 40CF. All three axes are merged in one miniature stage that delivers outstanding performance at exceptionally low prices. The translators can work in any orientation.

APPLICATION

The XYZ mini manipulator has been designed for ease and convenience of use. X and Y movement is ± 12.5 mm, depending on the accessories that are fitted. Z movement is 75-250 mm, depending on the application.

COMPRESSED / EXTENDED LENGTH

Compressed length [mm]
Extended length [mm]

Z range [mm]	DN 40/40CF bellow ID39	DN 63/40CF bellow ID39	DN 100/40CF bellow ID39
75	179 254	179 254	179 254
100	-	179.5 279.5	179.5 279.5

XYZ mini manipulator DN 63/40CF

TECHNICAL DATA

Base flange	DN 63CF or DN 100CF
Travelling flange	DN 40CF
XY range	± 12.5 mm
XY resolution	5 µm
Z range	75 - 100 mm
Z resolution (manual)	0.5 mm
Bakeout temperature	up to 150 °C

ADDITIONAL INFORMATION

Only the Z movement can be motorised.

XY MINI STAGE

Mini Stage for XY axes translations is available as well.

XY Mini STAGE
- XY range: +/- 6mm
- DN 63/40CF

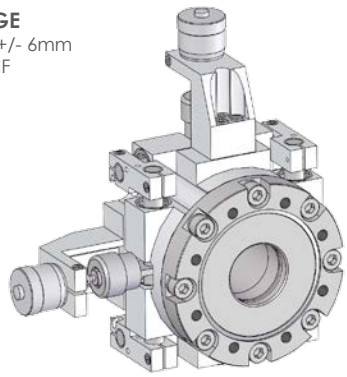

0 axis STAGE / 1-3 axes MANIPULATOR

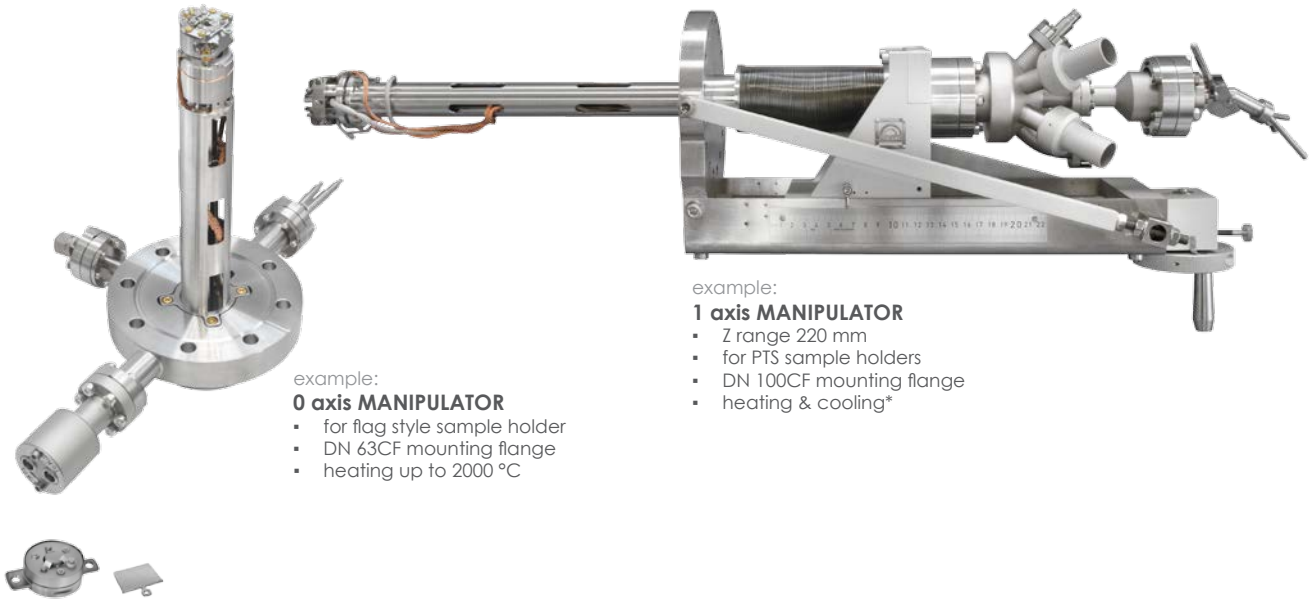

example:
0 axis MANIPULATOR
- for flag style sample holder
- DN 63CF mounting flange
- heating up to 2000 °C

example:
1 axis MANIPULATOR
- Z range 220 mm
- for PTS sample holders
- DN 100CF mounting flange
- heating & cooling*

0 axis STAGE

The 0-axis stage is the most appropriate and economical choice when sample heating and cooling is required without any form of manipulation/rotation etc. It has additional uses such as e.g. a temporary storage or static preparation table when combined with a wobble stick.

examples

0 axis STAGE
- for flag style sample holder
- heating up to 2000 °C
- DN 63CF mounting flange

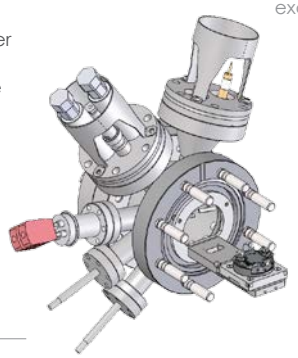

0 axis STAGE
- for PTS sample holder
- heating*
- DN 63CF mounting flange

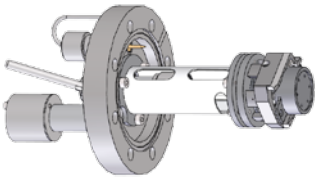

HEATING & COOLING OPTION

PTS and flag style range of sample holders dock with the receiving station on each manipulator. Samples are either resistively or electron-beam or direct current heated, depending upon the requirement. They are cooled by using a manipulator mounted cryostat through which liquid nitrogen (LN_2) or liquid helium (LHe) flows.

* range dependent upon specific PTS sample holder type.

1-3 axes MANIPULATOR

According to the precise individual needs of the client, we can design and provide a wide range of customised UHV manipulators. The manipulators can move sample in any of three orthogonal axes XYZ. Additional rotational movements around these axes (R1, R2, R3) can be achieved using add-on rotary devices. To achieve the highest positioning accuracy, resolution and repeatability, the XYZ manipulator and rotary drive movements can be motorised. Manipulators can work in any orientation.

examples

1 axis MANIPULATOR
- R1 axis rotation ± 175°
- for PTS sample holders
- DN 100CF mounting flange
- heating & cooling*

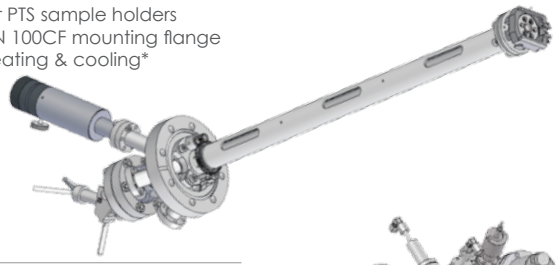

2 axes MANIPULATOR
- Z range 50 mm
- R1 axis rotation ± 180°
- for PTS sample holders
- DN 100CF mounting flange
- heating & cooling*

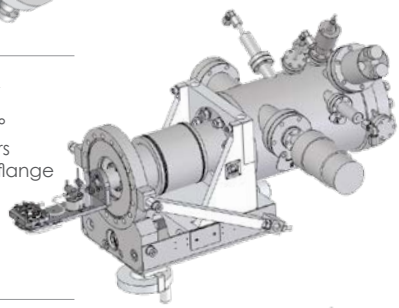

3 axes MANIPULATOR
- XY range ± 12.5 mm
- R1 axis rotation ± 175°
- for PTS sample holders
- DN 160CF mounting flange
- heating & cooling*

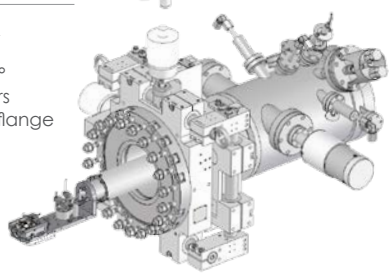

4-5* axes UNIVERSAL MANIPULATOR

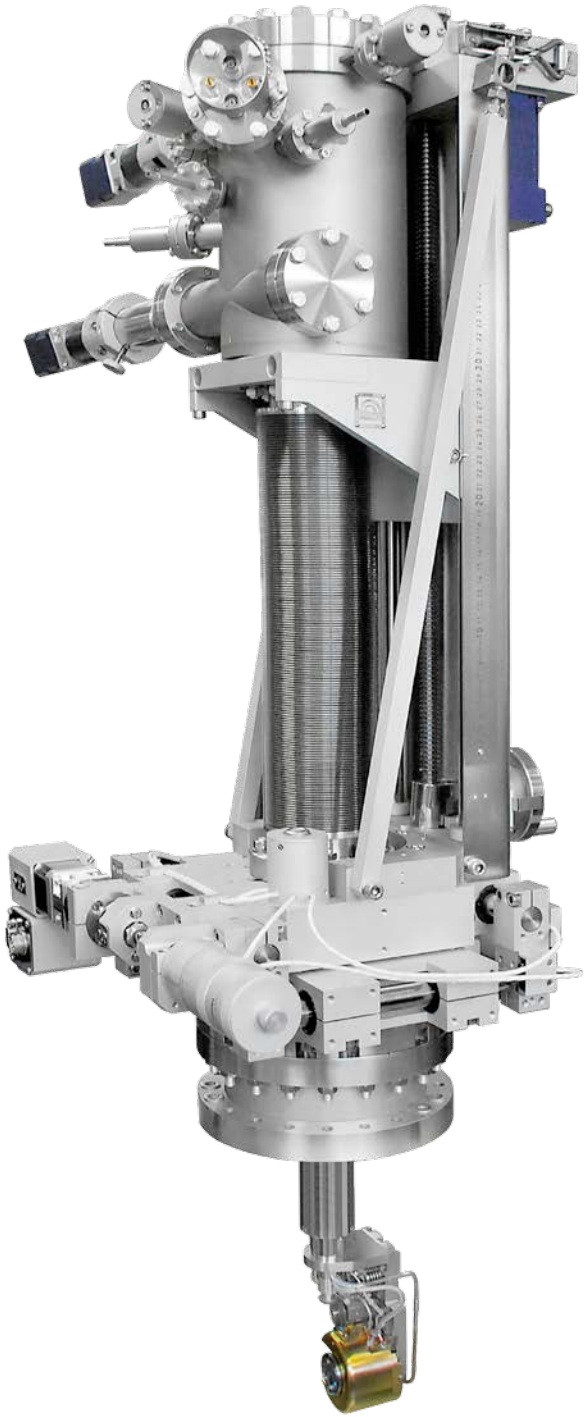

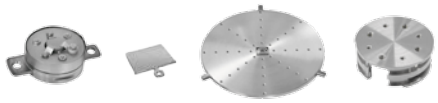

DESCRIPTION

The 4-5 axes manipulator with X, Y, Z, R1, R2 axes motorised is a high precision, high rigidity, UHV specimen manipulator of modular construction. The modular construction means that the specification can be upgraded or modified by the addition or replacement of well defined modules. All axes of the manipulator are motorised by stepper motors or servomotors. The X, Y and Z axes may also be operated manually by as required. The standard mounting flange is DN 100CF or DN 160CF. The 4-5 axes manipulator is a combination of XY stage, Z slide and rotation stages.

OPTION

- Full motorisation
- Full software control
- Temperature stabilisation
- Heating option: direct, resistive or EB
- Heaters suitable for reactive gases (resistive heating)

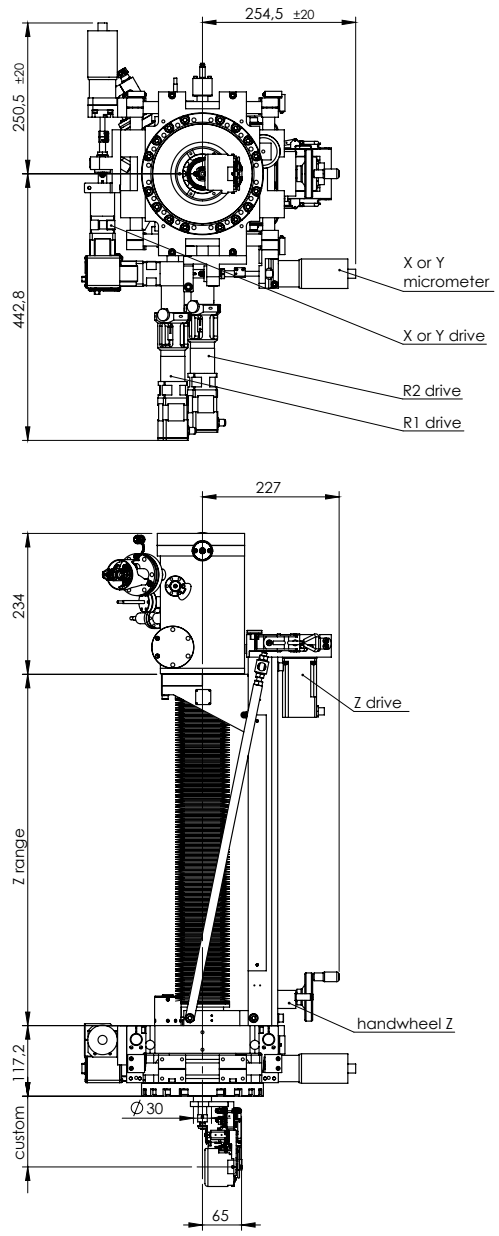

* 6 axes manipulator for PTS sample holders on request.

TECHNICAL DATA

Standard base flange	DN 100CF or DN 160CF
Pressure range	1 bar to 10^{-11} mbar
Heating method	resistive, EB, direct
Cooling method	LN_2
XY range	± 12.5 mm
positional control	micrometer/motorised*
resolution (manual/motorised)	5 µm / 1 µm
Z range	75-800 mm (other on request)
positional control	handwheel/motorised*
resolution (manual/motorised)	500 µm / standard 10 µm (1 µm on request)
R1 range	± 175°
positional control	rotary feedthrough/motorised*
resolution (motorised)	0.1°
R2 range	360° continuous / ± 90°
positional control	motorised
resolution (motorised)	0.1°
Bakeout temperature	up to 150 °C

* stepper motor or servomotor - depend on application.
Manipulator can be prepared for customer motors or drivers - on request.

4 AXES MANIPULATOR 5 AXES MANIPULATOR

ADDITONIAL INFORMATION

The multi-axes manipulators are configured with a sample receiving station that can accept one of the PTS range of sample holders. The station is equipped with 6 electrical contacts (2 x thermocouple type K, C or E; 2 x sample bias up to 1000V, 2 x heating current up to 20A) and sapphire ball cooling contact for liquid nitrogen cooling. The manipulator includes all of the necessary electrical, gas and mechanical feedthroughs together with stepper motor and stepper motor driver for the XY, Z, R1 and R2 axes.

RECEIVING STATIONS

for **standard PTS** sample holder
(5-axes manipulator)

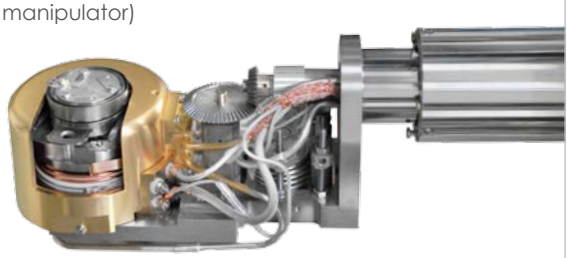

for **flag style** sample holder
(5-axes manipulator)

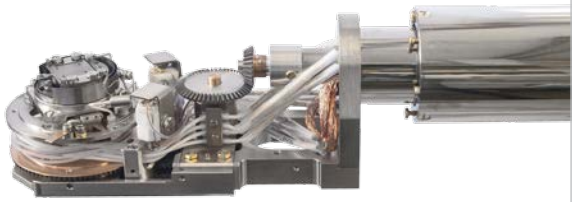

for **plate style** sample holder
(5-axes manipulator)

for **flag style** sample holders with optional quartz balance
(4-axes manipulator)

Examples of station functionality:

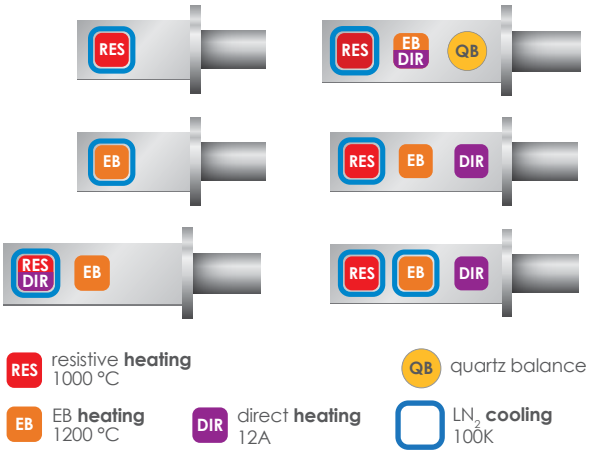

4-6 axes HELIUM MANIPULATOR OPEN CYCLE

DESCRIPTION

The manipulator is a high precision, high rigidity, UHV specimen manipulator of modular construction, suitable for a range of X, Y and Z linear motions and R1, R2 and R3 rotations. The modular construction means that the specification can be upgraded or modified by the addition to replacement of well defined modules.

OPTION

- Full motorisation
- Full software control
- Helium recovery system
- Possibility to mount an angular device for PES calibration
- Temperature stabilisation
- Heating option: direct, resistive or EB

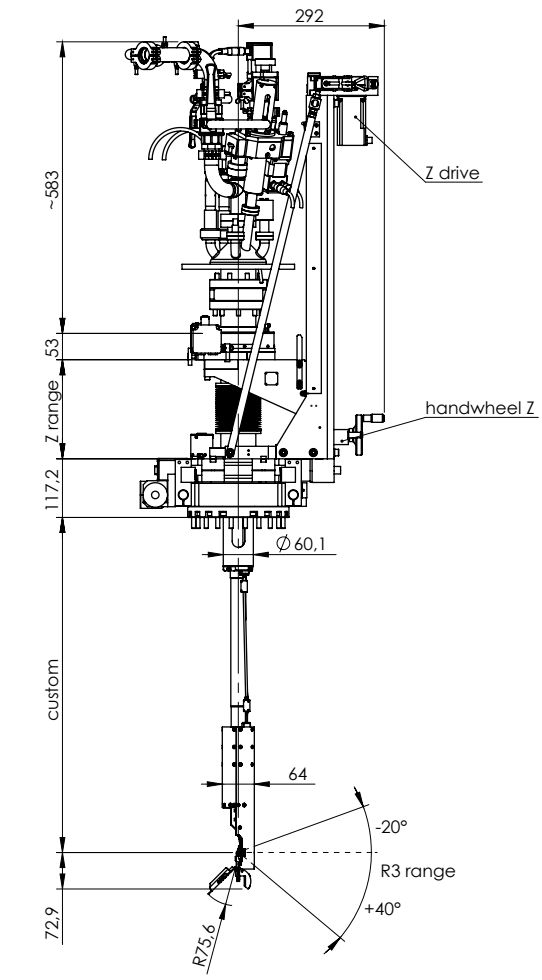

example drawing

TECHNICAL DATA

Standard base flange	DN 100CF or DN 160CF
Pressure range	down to 10^{-11} mbar
Heating methods	resistive, EB, direct
Cooling method	LHe
XY range	± 12.5 mm
positional control	micrometer/motorised*
resolution (manual/motorised)	5 µm / 1 µm
Z range	up to 600 mm
positional control	handwheel/motorised*
resolution (manual/motorised)	1 mm / standard 10 µm (1 µm on request)
R1 range	± 180° or ± 360°
positional control	rotary feedthrough/motorised*
resolution (motorised)	0.1°
R2 range	360° continuous
positional control	motorised*
resolution (motorised)	0.1°
R3 range	- 20° to +40°
positional control	rotary feedthrough/motorised*
resolution (motorised)	0.1°
Bakeout temperature	up to 150 °C

* stepper motor or servomotor - depend on application.
Manipulator can be prepared for customer motors or drivers - on request.

RECEIVING STATION

for **flag style** sample holder

HEATING & COOLING METHODS

Sample temperature depend on sample holder type.

Direct heating with **10 A**

Resistive heating **up to 1100 °C**

EB heating **up to 1400 °C**

Liquid helium cooling:
- 4 axes manipulator **down to 4 K***
- 5 axes manipulator **down to 4.8 K* / 10 K****
- 6 axes manipulator **down to 7 K* / 15 K****

* parameters achieved without heating option and temp. stabilisation.
** parameters achieved with heating option.

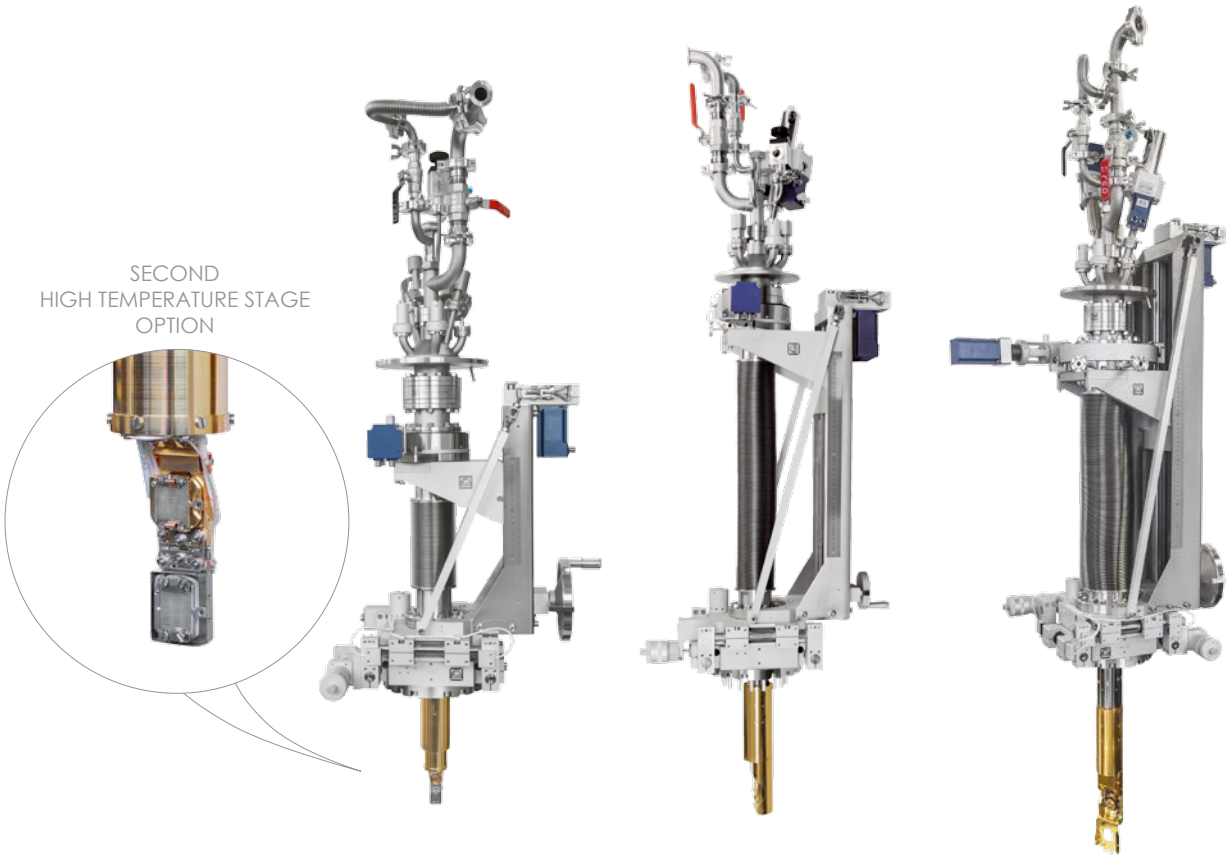

4 AXES LHe MANIPULATOR 5 AXES LHe MANIPULATOR 6 AXES LHe MANIPULATOR

4-6 axes HELIUM MANIPULATOR CLOSED CYCLE

DESCRIPTION

The manipulator with helium cryostat is a versatile, closed cycle system that has many applications in ultra high vacuum research. The manipulator can be configured with Z slide, XY stage or differentially pumped rotary feedthrough. The modular construction means that the specification can be upgraded or modified by the addition or replacement of well defined modules. The standard mounting flange is DN 100CF. The system typically includes a compressor, high pressure hoses, expander, temperature controller, heater and sensor.

OPTIONS

- Full motorisation
- Full software control
- Helium recovery system
- Possibility to mount an angular device for PES calibration
- Additional electrical contacts for silicon sample direct heating
- Low vibration cryostat
- Temperature stabilisation
- Heating option: direct, resistive or EB

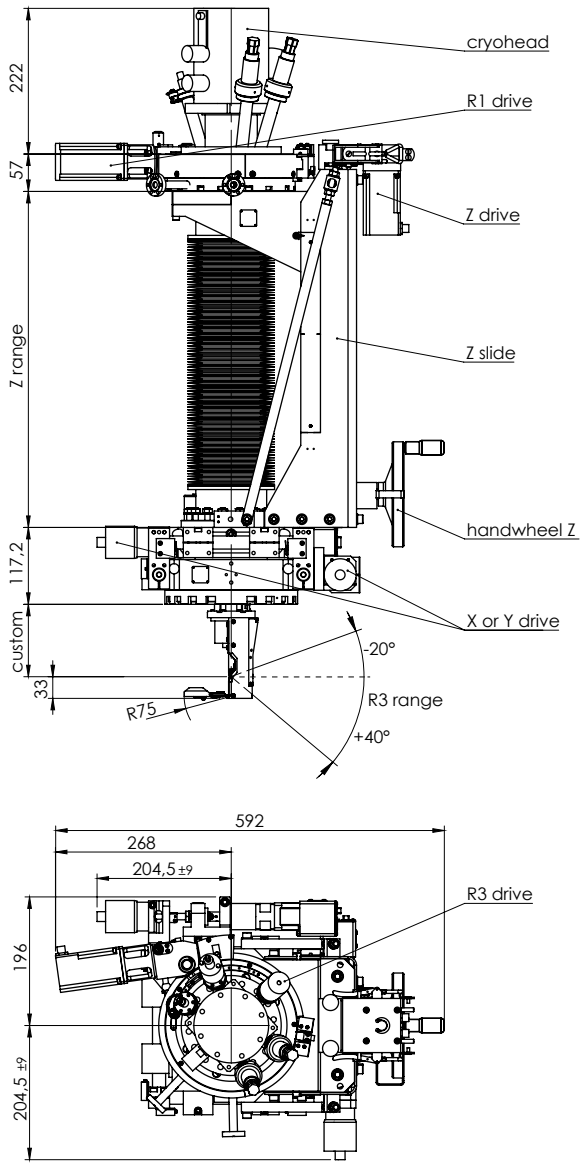

example drawing

TECHNICAL DATA

Standard base flange	DN 100CF or DN 160CF
Pressure range	1 bar to 10^{-11} mbar
Heating methods	resistive, EB, direct
Cooling method	LHe
XY range	± 12.5 mm*
positional control	micrometer/motorised**
resolution (manual/motorised)	5 µm / 1 µm
Z range	up to 300 mm
positional control	handwheel/motorised**
resolution (manual/motorised)	50 µm / standard 10 µm (1 µm on request)
R1 range	± 180°
positional control	rotary feedthrough/motorised**
resolution (motorised)	0.1°
R2 range	360° continuous
positional control	motorised**
resolution (motorised)	0.1°
R3 range	- 20° to +40°
positional control	rotary feedthrough/motorised**
resolution (motorised)	0.1°
Bakeout temperature	up to 150 °C

* for base flange DN 160CF
** stepper motor or servomotor - depend on application.
Manipulator can be prepared for customer motors or drivers - on request.

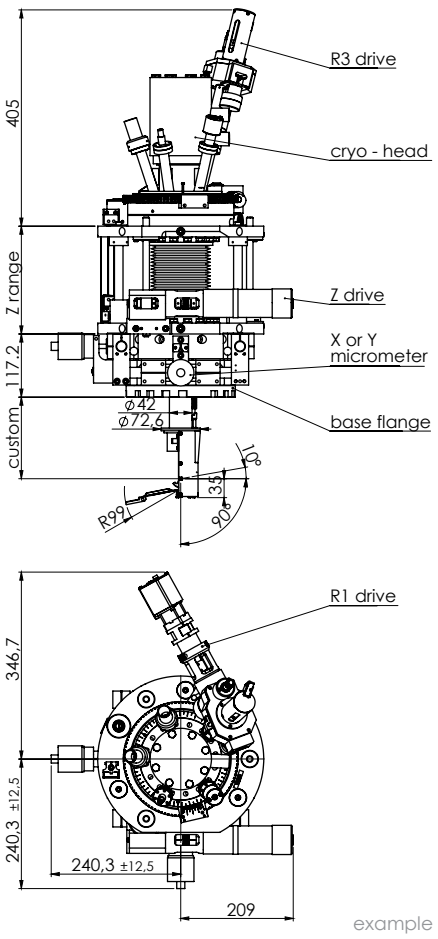

example drawing

RECEIVING STATION

for **flag style** sample holder

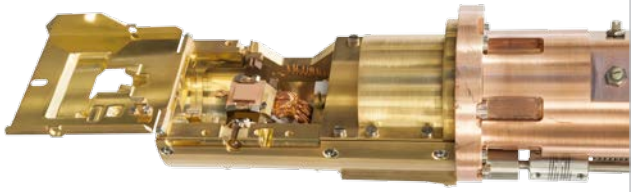

with second heating stage for **flag style** sample holders

HEATING & COOLING METHODS

Sample temperature depend on sample holder type.

Direct heating with **10 A**

Resistive heating (on request)

EB heating **up to 1000 °C** (second heating stage)

Liquid helium cooling:
- **below 10 K** (5-axes manipulator)*

* parameters achieved without stabilisation and without heating option.

5 AXES LHe MANIPULATOR (with Z chain slide)

1-2 axes MBE MANIPULATOR

DESCRIPTION

The 1-2 axes motorised MBE manipulator is a high precision, high rigidity, UHV specimen manipulator of modular construction, suitable for a range of R1 motorised continuous substrate rotation and Z translation. It is prepared to heat the substrate up to 1400°C (EB heating, UHV conditions) with accuracy +/- 1°C. The station includes the substrate (standard up to 6 inch sample holder) positioner and allows precise angular position of substrate in relation to linear shutter.

OPTIONS

- H_2O shroud
- LN_2 or H_2O cooling
- side or integrated wedge shutter (possible with H_2O cooling option)
- XY movement stage
- shutter on/off

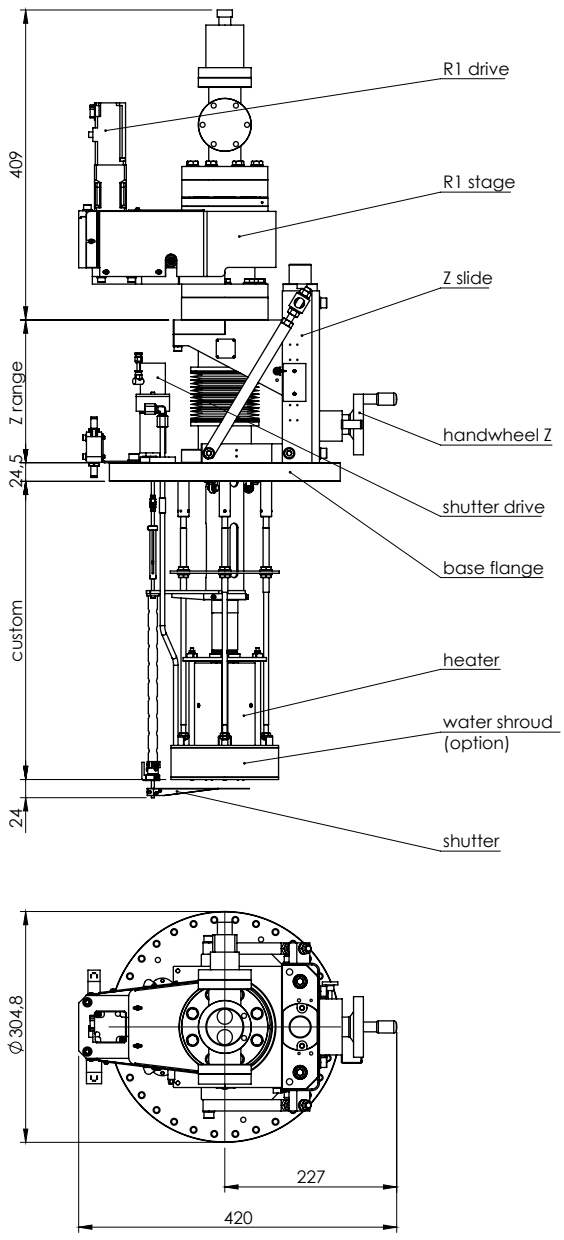

example drawing

TECHNICAL DATA

Standard base flange	DN 100CF to DN 300CF (depending on the sample size, other on request)
Base pressure range	10^{-11} mbar
Shutter	integrated or external, pneumatic or manual
Heating methods	resistive, EB
Substrate temperature	up to 1200 °C (resistive) up to 1400 °C (EB)
Cooling method	LN_2, H_2O
Z range	50 mm (other on request)
positional control	handwheel / motorised*
resolution (manual/motorised)	500 µm / standard 10 µm
R1 range	360° continuous
positional control	motorised*
XY range (option)	± 12.5 mm
positional control	micrometer/motorised*
resolution (manual/motorised)	5 µm / 1 µm
Max speed	up to 60 rpm
Temperature uniformity	0.8% (resistive heating temp.: 1200 °C)
Bakeout temperature	up to 150 °C / 200 °C (on request)

* stepper motor or servomotor - depend on application.
Manipulator can be prepared for customer motors or drivers - on request.

APPLICATION

The 1-2 axes motorised MBE manipulator is designed for MBE applications under ultra-high vacuum conditions. Heating is performed by resistive or EB methods. The manipulator can work in the vertical orientation.

2 AXES MBE MANIPULATOR (for 3" 4-holes plate holder)

2 AXES MBE MANIPULATOR (for 1" 4-holes plate holder)

RECEIVING STATIONS

for **4-holes plate style** sample holder

for **4-holes plate style** sample holder, with **LN_2 cooling stage**

HEATER MATERIALS

Graphite	flexible (stable in form), minimal outgassing at the high temperatures, oxidation resistant below 500°C
Graphite + PBN coating	flexible (stable in form), minimal outgassing at the high temperatures, oxidation resistant below 800°C (depends on partial pressure of oxygen)
Graphite + SiC coating	hard, light and stable in form, oxidation resistant below 1400°C
SiC solid (β)	extremely hard, light and stable in form, low thermal expansion, durable to mechanical and electrical shocking, excellent resistance to reactive gases/oxidation

MANIPULATOR FOR **MBE APPLICATION**

- sample holders: generally plate style
- prepared for reaching high temperature
- base pressure: 10^{-11} mbar

1-4 axes SPUTTERING MANIPULATOR

DESCRIPTION

The 1-4 axes motorised manipulator is a high rigidity, UHV specimen manipulator of modular construction, suitable for a range of R1 motorised continuous substrate rotation and Z translation (additionaly can be equipped with XY movement module). It is prepared to heat the substrate up to 1000°C with accuracy +/- 1°C. The station includes the substrate (standard up to 6 inch sample holder) positioner and allows precise angular position of substrate in relation to linear shutter.

OPTIONS

- H_2O cooling
- side or integrated wedge shutter
- XY movement stage
- BIAS, DC ,RF

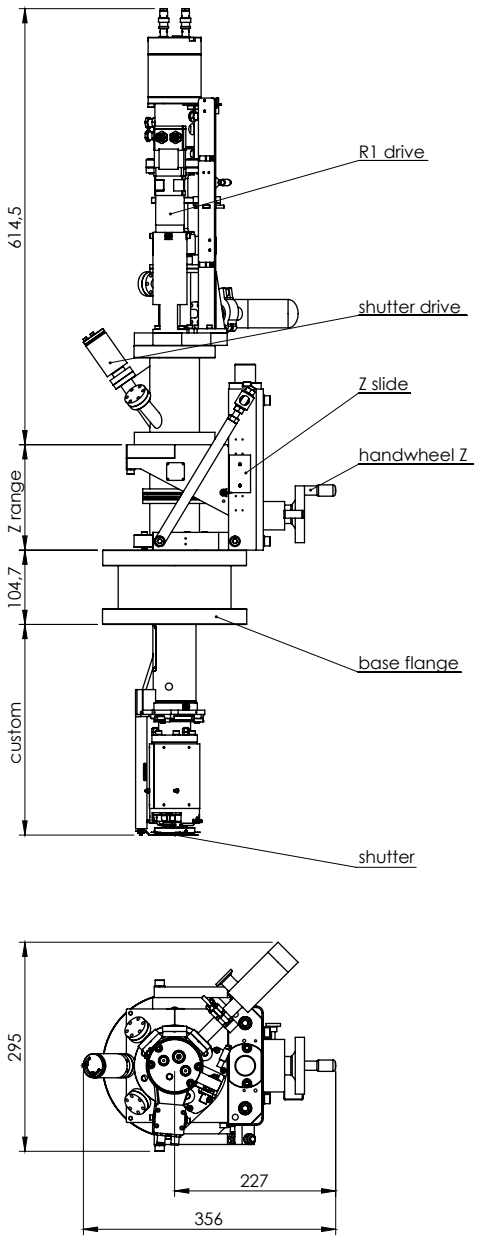

example drawing

TECHNICAL DATA

Standard base flange	DN 100CF, DN 160CF or DN 200CF
Base pressure range	10^{-10} mbar
Shutter	integrated or external, pneumatic or manual
Heating methods	resistive, direct
Substrate temperature	up to 1000 °C
Cooling method	H_20
Z range	50 mm (other on request)
positional control	handwheel / motorised*
resolution (manual/motorised)	500 µm / standard 10 µm (1 µm on request)
R1 range	360° continuous
positional control	motorised*
XY range (option)	± 12.5 mm
positional control	micrometer/motorised*
resolution (manual/motorised)	5 µm / 1 µm
Max speed	up to 60 rpm (other on request)
Bakeout temperature	up to 150 °C

* stepper motor or servomotor - depend on application.
Manipulator can be prepared for customer motors or drivers - on request.

APPLICATION

The 1-4 axes motorised sputtering manipulator is designed for sputter deposition applications under ultra-high vacuum conditions, and for reactive sputtering. Heating is performed by resistive or direct method. The manipulator can work in the vertical orientation.

Double stage receiving station for confocal/planar magnetron configuration in the proccess chamber.

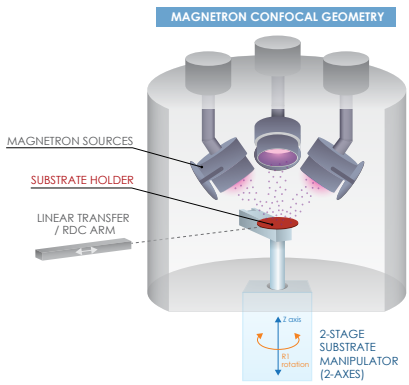

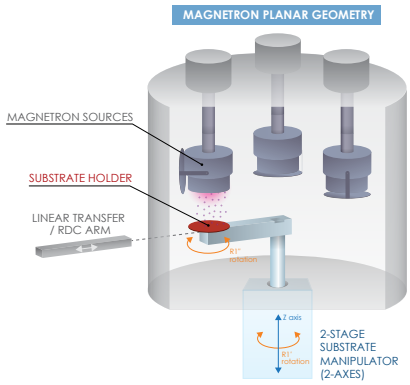

RECEIVING STATIONS

for **PTS** sample holder

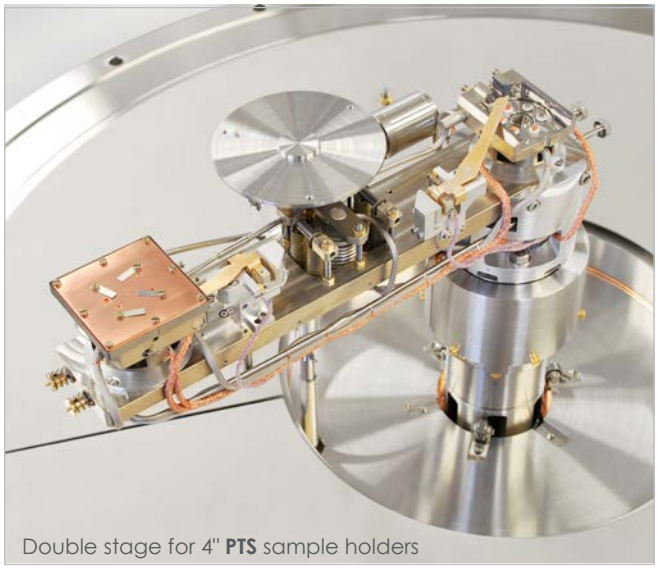

Double stage for 4" **PTS** sample holders

HEATER MATERIALS

The heater material is optimally adapted depending on the customer's requirements and the specific conditions of the deposition process (e.g. heating temperature, presence of reactive gases). Exemplary heaters: thermocoax, graphite coated with SiC, SiC solid (β).

MANIPULATOR FOR **SPUTTERING APPLICATION**

- sample holders: plate style, PTS
- base pressure: 10^{-10} mbar (working pressure: ~10^{-2} mbar)

1-4 axes PLD TARGET MANIPULATOR

1-axis, 6-position target manipulator
for **horizontal** PLD process geometry

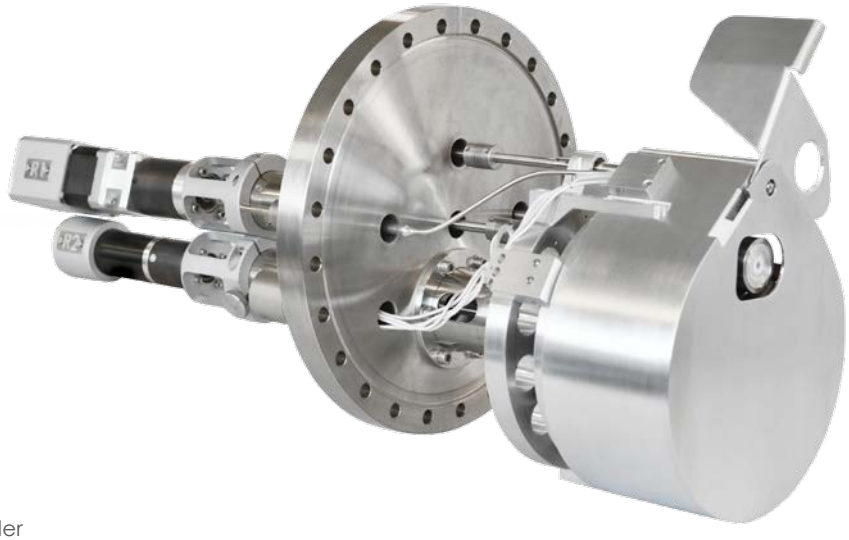

1" target holder

DESCRIPTION

The 1-4 axes motorised PLD target manipulator is a high precision, high rigidity, UHV specimen manipulator with revolver mechanism up to 6 target holders. The target manipulator has two axes of rotation - R1 and R2: by changing the position of R1, different targets are selected. The R2 axis has a continuous rotation around its own axis. The manipulator has additional hole/position (between two targets) to accommodate a laser power meter. The XY motion module allows scanning of the target via laser beam. One axis is motorised - for scanning, second is manual - for adjusting. Additional Z axis is used to set up transfer position for target transferring via Load Lock Chamber. The Z movement can be motorised or manual. Computer controls the target rotation and radial scanning over the complete target diameter (fixed laser beam) for making multi-layer deposition with maximum target usage.

APPLICATION

The 1-4 axes motorised PLD target manipulator is designed for pulsed laser deposition applications under ultra-high vacuum conditions. The manipulator can work in vertical or horizontal orientation, depends on PLD process geometry.

ADDITIONAL INFORMATION

- possibility of fixing targets with irregular shapes,
- target sizes: 1 ", 2", standard target thickness: 0.5 - 10 mm,
- continuous, individual rotation of targets,
- select and sequence change of targets,
- shield against mutual pollution of targets,
- radial scan, automatic control,
- target is mounted coaxially (relative to the substrate) and positioned so as to eliminate the likelihood of droplets, clusters settling on the substrate and the effects of possible target peeling,
- target holders are transferable to the load-lock chamber (or storage) for quick replacement,
- water cooling system.

1-axis, 6-position target manipulator
for **horizontal** PLD process geometry

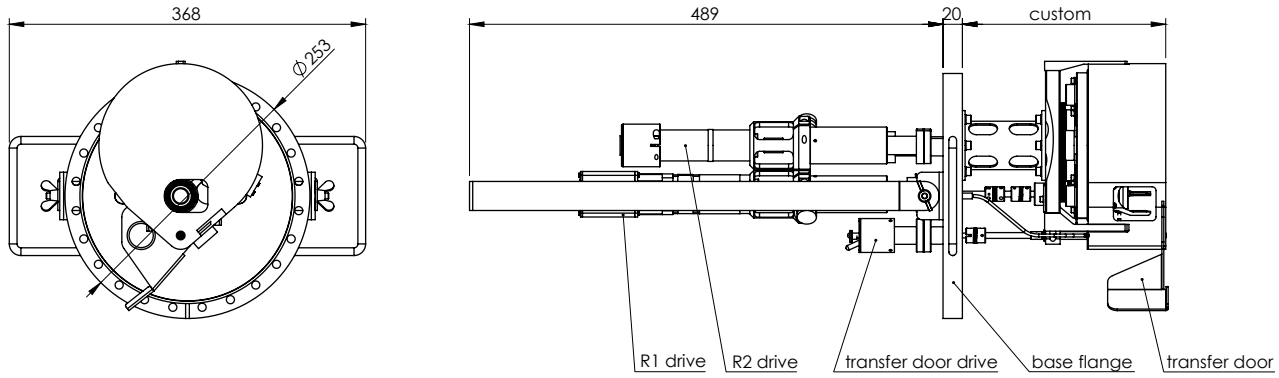

example drawing

4-axes, 6-position target manipulator
for **vertical** PLD process geometry

Bottom mounting design

Side mounting design

4-axes, 6-position target manipulator
for **vertical** PLD process geometry

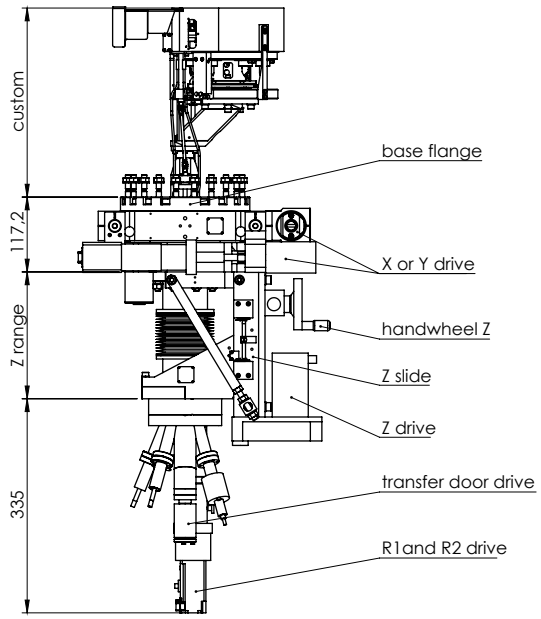

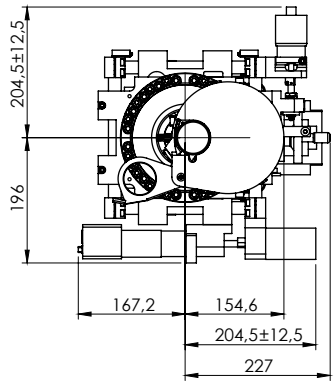

example drawing

TECHNICAL DATA

Standard base flange	DN 100CF or DN 200CF
Base pressure range	10^{-10} mbar
Shutter	integrated, pneumatic
Cooling method	H_2O
R2 range	360° continuous
positional control	motorised*
resolution (motorised)	0.1°
Z range	50 mm (other on request)
positional control	handwheel
resolution (manual/motorised)	500 µm / standard 10 µm (1 µm on request)
XY range	± 12.5 mm
positional control	micrometer/motorised*
resolution (manual/motorised)	5 µm / 1 µm
Max speed	up to 50 rpm (other on request)
Bakeout temperature	up to 150 °C

* stepper motor or servomotor - depend on application.
Manipulator can be prepared for customer motors or drivers - on request.

MANIPULATORS FOR **PLD APPLICATION**

- two manipulators: for **substrate** and **target**
- substrate holders: plate style, PTS, flag style
- base pressure: 10^{-10} mbar

BEAMLINE MANIPULATORS

MIRROR CHAMBER

SLIT UNIT MANIPULATOR

VERTICAL WEDGE STAGE

HIGH PRECISION ROTATION UNIT

MIRROR / GRATINGS SYSTEM

Vacuum mirror chambers are situated along the synchrotron beam line. Mirrors are located inside the chamber and mounted on a vibration isolated special holder which is moved using a multi-axis manipulator in order to determine the correct direction of the beam.

MIRROR MANIPULATOR KINEMATIC DATA

Example for **cylindrical focusing mirror**

Axis	Range	Resolution
X	± 10 mm	≤ 10 µm
Z	± 10 mm	≤ 10 µm
X'	± 10 mRad	≤ 0.5 µRad
Y'	± 10 mRad	≤ 0.5 µRad
Z'	± 10 mRad	≤ 0.5 µRad
Z"	± 15 mm	≤ 10 µm

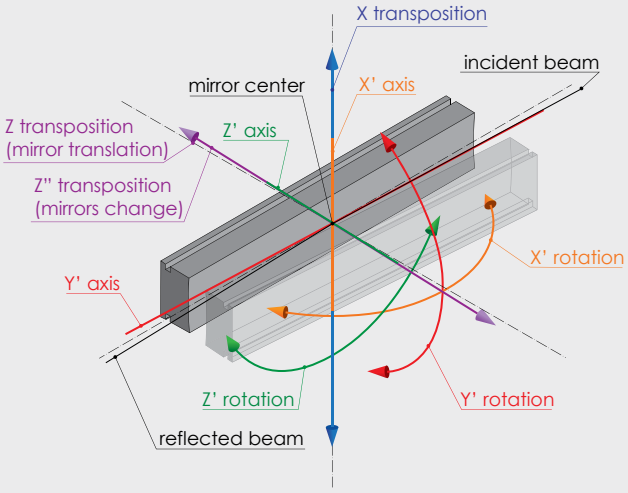

SLIT UNIT

Horizontal and vertical shutters, positioned inside the vacuum chamber, are translated via a single axis manipulator in order to adjust the shape of cross-sectional area of the beam. All manipulators are motorised and software controlled. Shutters are available with or without water cooling. Surfaces can be coated with a fluorescent material. Different material and shapes available according to requirements.

SLIT UNIT MANIPULATORS KINEMATIC DATA

Manipulator	Axis	Range	Resolution
Photodiode	Z	± 25 mm	≤ 10 µm
HES shutter	Z	± 6 mm	≤ 0.5 µm
VES shutter	Z	± 0.5 mm	≤ 0.5 µm
Chamber shift along the beamline	Z	± 100 mm	≤ 50 µm

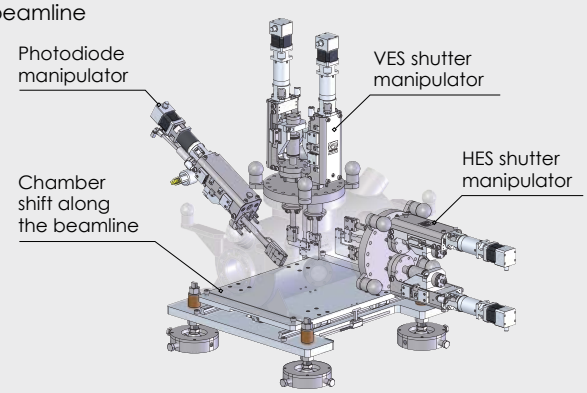

VERTICAL WEDGE STAGE

Very rigid vertical axis stage for e.g. positioning the grating chamber. Z stroke ± 10 mm, resolution 5 µm, motorised.

SPECIAL MANIPULATORS | GONIOMETERS

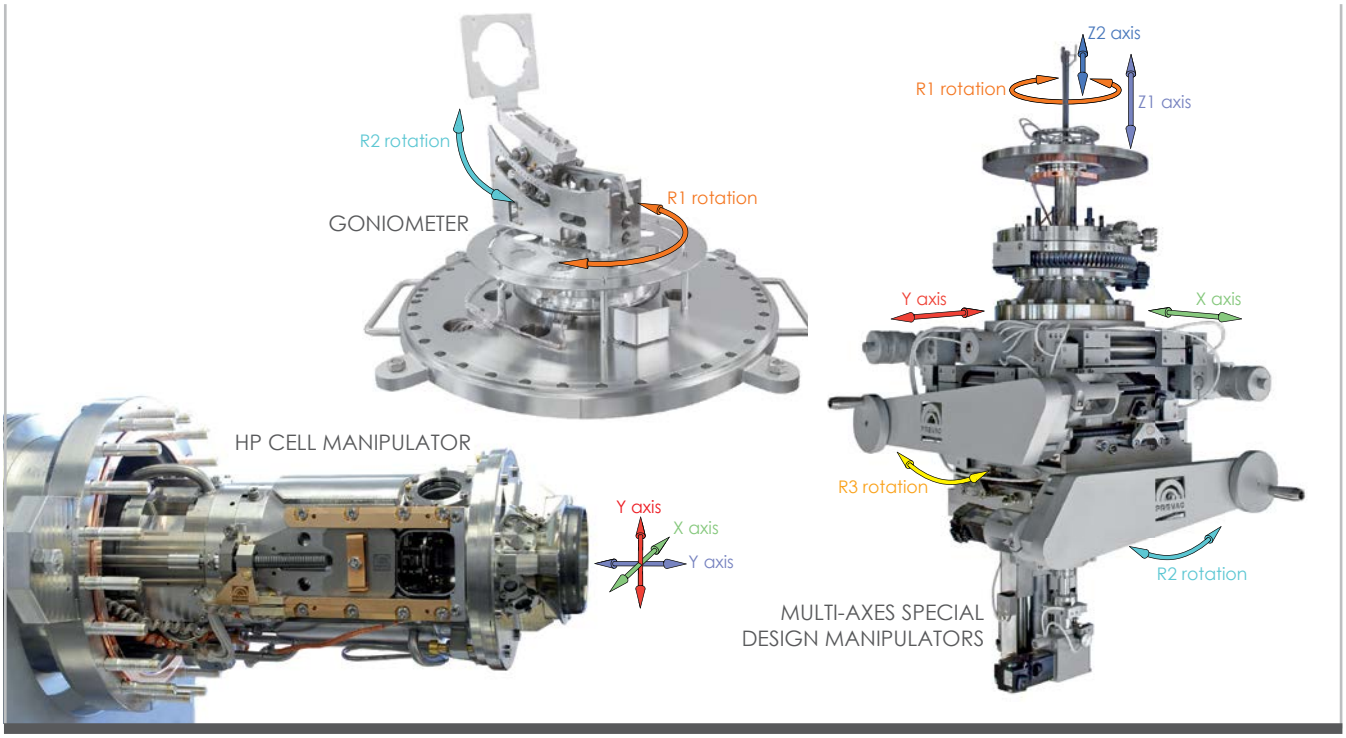

GONIOMETERS

The precision, 2-axes goniometer stage is designed specifically for anti-clash and sample access. Both axes are fitted with vernier readouts of 0.1° precision. Full 360° R1 rotation in the horizontal plane (with no sources hindering the movement). 90° R2 rotation from vertically upward pointing to horizontal. Stepper motor controller with external panel and computer interface.

The goniometer's head permits precision sample positioning and alignment motion at the sample location. Installation of a goniometer head enables rotations, translations and flip movements with various accuracies. Sample faces can be held on axis, allowing a single sample site to be investigated during a change of angle. The goniometer is fabricated entirely from UHV compatible materials, has anti-backlash spring-loaded gearing, and can also be fitted with heating, cooling and sample transfer options.

HIGH PRESSURE CELL MANIPULATOR

Specially designed 3-axes high pressure cell manipulator with IR laser heating possibility (double Z axes: one for gas cell proper placement and second for high precise sample positioning). For easy disconnection from the gas cell chamber, the manipulator is mounted on the rails.

HP cell manipulator design allows for sample heating by IR laser illumination (the sample temperature over 800 °C is reachable within the cell), resistive heating (up to 700 °C) and LN_2 cooling.

MULTI-AXES SPECIAL DESIGN MANIPULATORS

The multi-axes (X,Y,Z1,Z2,R1,R2,R3) motorised manipulator is designed for precision positioning of sample holders under ultra high vacuum conditions.
Reasearch table can travel along the XYZ axes, rotate around Z axis, as well as tilt in relation to two orthogonal directions in the +/- 3° range. The second Z movement is possible for additional precise sample positioning while experiment. It is equipped with temperature monitoring system. These manipulators are configured with an inclinometer as standard.

SPECIAL MANIPULATORS

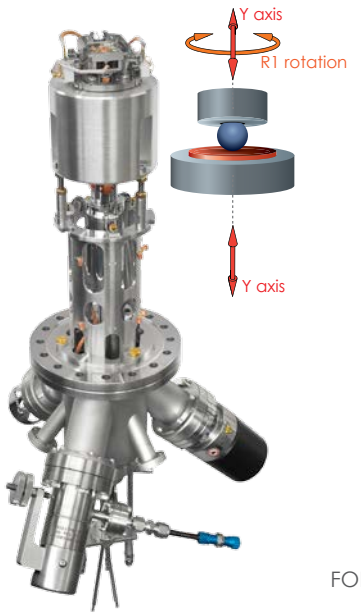

TRIBOMETRIC MANIPULATORS

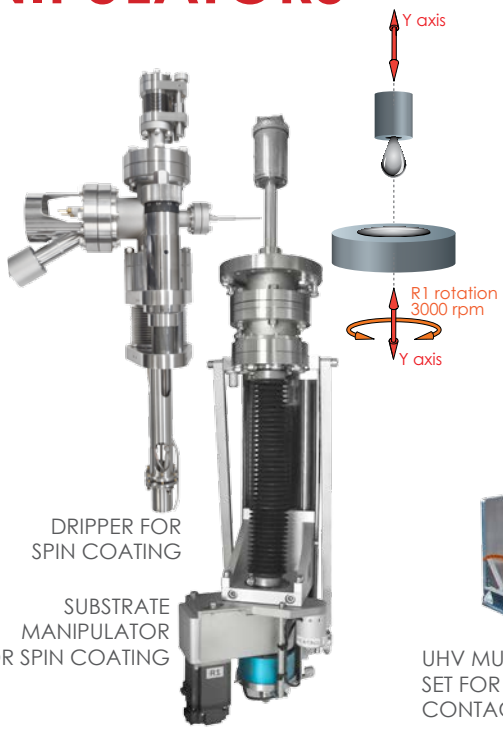

DRIPPER FOR SPIN COATING

SUBSTRATE MANIPULATOR FOR SPIN COATING

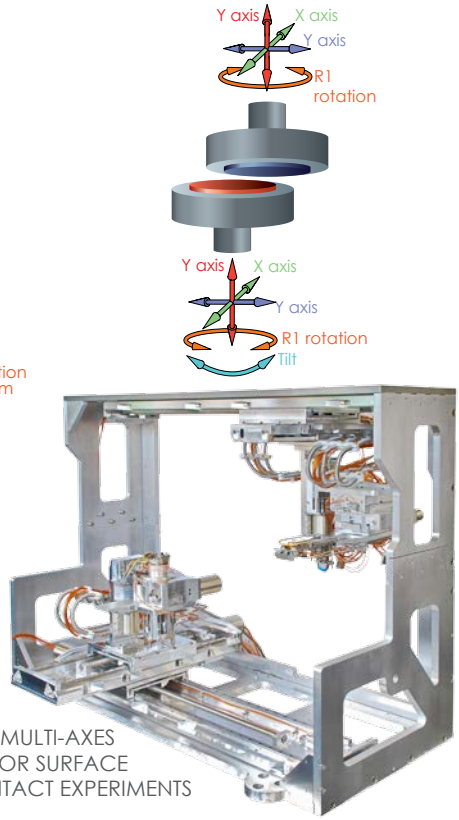

UHV MULTI-AXES SET FOR SURFACE CONTACT EXPERIMENTS

TRIBOMETRIC MANIPULATORS

Special designed 1-2 axes manipulators for study tribological properties between two surfaces in UHV or ambient pressure conditions. Manipulators are prepared for positioning flat and ball sample (up to 1/2") holders, with heating and cooling possiblity. They allows for applying load from 1 to 10N (with closed loop control).

DRIPPER/MANIPULATOR FOR SPIN COATING

Spin coating manipulators are used to deposit metal oxide thin films, polymer coating, organic thin films and others. An excess amount of a solution is placed by dripper on the substrate. The substrate manipulator is then rotating at high speed. The solvent is usually volatile and evaporates when rotating under vacuum, leaving a uniform thin film on the substrate. The deposited films have thicknesses ranging from a few nanometers up to hundreds of nanometers.

UHV MULTI-AXES SET FOR SURFACE CONTACT EXPERIMENTS

Custom designed, full-motorised, double stage manipulator for PTS sample holders. Stage stacks (top and bottom) allows frequent movements within its full travel range: X-axis up to 508 mm, Y-axis up to 200 mm, Z-axis: 26 mm, 360° rotation (top stage), ±5° tip & tilt (bottom stage). Receiving stations are prepared for heating and thermal measurements, complete with all electrical and mechanical feedthroughs and connections. Manipulator design also enables measurement of vertical force applied to the sample.

MANIPULATORS FOR LIQUID EXPERIMENTS

Special designed manipulators for conducting electrochemical experiments in pressures from $1x10^{-6}$ mbar up to 25 mbar. Manipulators have exchangeable vacuum parts with receiving station, depending on the experiment, e.g. 3-axes manipulator for solution/jet catcher can be equipped with station for mounting the glass beakers.

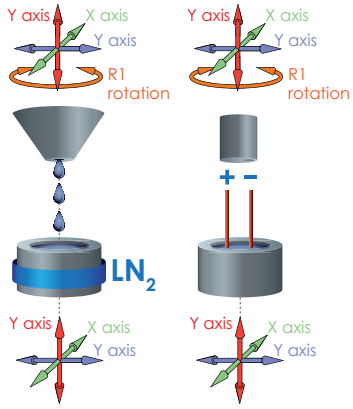

MANIPULATORS FOR LIQUID EXPERIMENTS

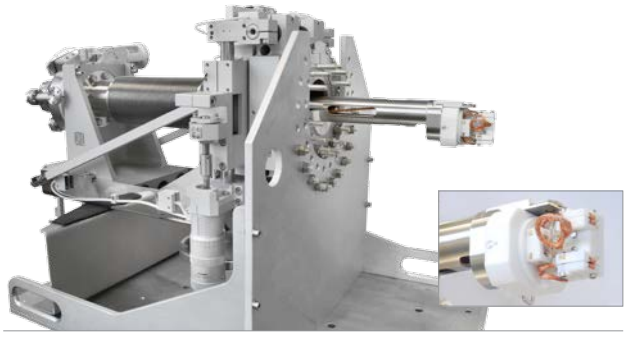

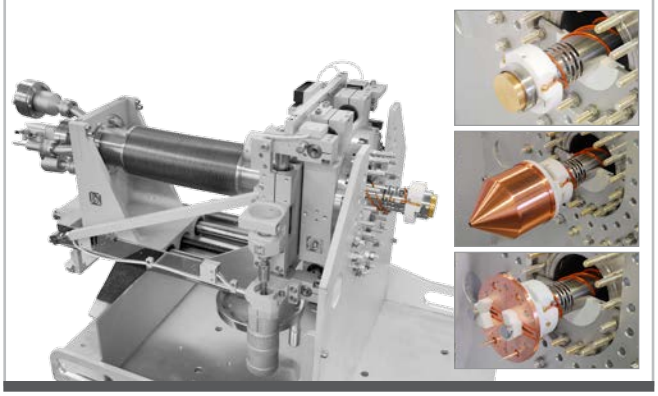

RELATED PRODUCTS

WOBBLE STICK

WITH CLEAVER

WITH ROTATING TIP

WITH GRIPPING ARMS

DESCRIPTION

The Wobble Stick allows the transmission of relatively simple hand movements through the vacuum wall. The flexible bellows provide a cone of movement as well as a limited degree of linear movement at the end of the wobble stick. Standard mounting flange is DN 40CF.

with CLEAVER

The **Wobble Stick with Cleaver** is a 3-axis manipulator dedicated to cut the sample in UHV chambers. It has interchangeable knives, fixed with four screws M3 and pressed using plates.

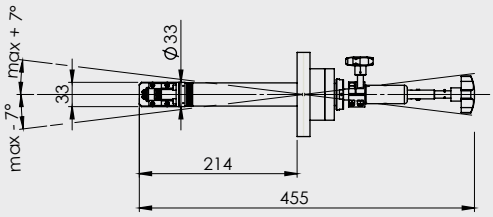

Mounting flange	DN 63CF (other on request)
Z travel	130 mm
R2 angular range	± 7°
R3 angular range	± 7°
Blade width	12 mm
Bakeout temperature	up to 150 °C

with ROTATING TIP

The **Wobble Stick with Rotating Tip** is used mainly to operate in vacuum mechanisms such as shutters, adjustment probes and variable orifices. Non magnetic vacuum parts.

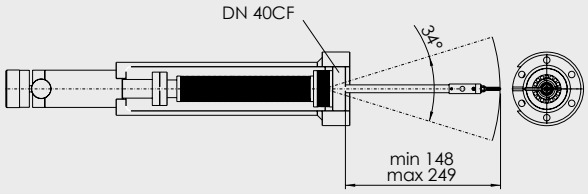

Mounting flange	DN 40CF
Z travel	100 mm
Angular range	± 17°
Rotation	360°
Bakeout temperature	up to 150 °C

with GRIPPING ARMS

The **Wobble Stick with Gripping Arms** is generally used to grip and lift samples (15x10x1 mm) with a flat surface. Custom shaft length and Z travel ranges are available on request.

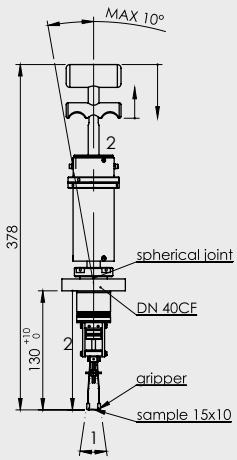

Mounting flange	DN 40CF
Z travel	10 mm
Angular range	± 10°
Bakeout temperature	up to 150 °C

LOAD LOCK

STANDARD LOAD LOCK (DEDICATED CONNECTION PORT)

LOAD LOCK WITH DOOR ACCESS

LOAD LOCK WITH DOOR ACCESS FOR 5 PCS 6" PTS SAMPLE HOLDERS

DESCRIPTION

Load lock chambers provide a fast and clean method of introducing samples into UHV systems. The load lock chamber mechanisms combine with our range of load lock chambers to provide the most versatile sample loading conditions at various positions on the UHV system.

ADDITIONAL INFORMATION

Load locks may be positioned at various places on the UHV system, such as direct connection to the radial distribution chamber, linear transfer line or glovebox. Our standard range of load lock chambers are suitable for most positions and most applications but we will also be happy to fabricate to your individual specifications.

Load lock chambers are typically equipped with:
- Load lock chamber mechanism
- Pump system
- Viewports
- Pressure gauges

The top port of the load lock chamber mechanism is usually sealed by a viton gasket. The chambers are equipped with UHV connecting flanges and additional ports for future versatility. They are designed for base pressures between $1x10^{-7}$ mbar and $1x10^{-9}$ mbar. A range of options exist for e.g. LN_2 cooling or heating samples up to 600 °C.

STORAGE

STORAGE FOR 6 PCS PTS SAMPLE HOLDERS

STORAGE FOR 6 PCS* FLAG SAMPLE HOLDERS

STORAGE FOR 30 PCS 6" PTS SAMPLE HOLDERS

DESCRIPTION

The storage chambers allow storage of up to 10 sample holders under UHV conditions. The storage chamber mechanism combines with our range of storage chambers.

* direct/resistive heating option for 6 pcs holders

SPECIFICATION

Storage chambers are usually pumped via the distribution chamber pump set (independent pumping is also possible if requested) and may be equipped with options for cooling or heating. The heating and cooling facilities apply to the sample that is in the load position and depend upon the individual sample holder specifications.
The chambers are equipped with UHV connecting flanges and additional ports for future versatility.

HEAT3-PS SAMPLE HEATING POWER SUPPLY

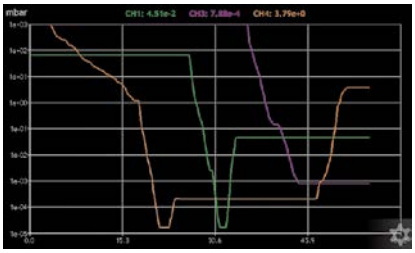

Real time pressure charts (data export possibility).

DESCRIPTION

The HEAT3-PS is used for resistive heating or electron bombardment heating. The power supply can also be used for effusion cell evaporators. The unit is equipped with a PID temperature controller. Ramp heating function control sample temperature to protect sample from damage. Sample overheating can also be protected by setting the voltage and current limits. The unit can be operated in auto mode (with temperature control) or manual mode (without temperature control). The unit is equipped with autosave function (the device save your parameters, preset and apply them automatically after restart).

FEATURES

- **Dual heating mode**: **resistive** and **electron bombardment**
- Wide range temperature measurement (1.4 - 2473.15 K)
- **2D real time chart module**
- High efficiency
- Setpoint based over-voltage and over-current output protection
- Fully manual or PID temperature controlled (by setpoint and ramp)
- Process temperature control with built-in PID controller (with autotuning function for optimized process PID parameters)
- Various kind of temperature sensors: thermocouples K/C/E/N (other on request), Pt, diode
- Multiple I/O (10 digital/4 analog) - individual reprogrammable
- High resolution (16-bit analog I/O, 0.1 K temp.)
- One vacuum channel for active gauges
- **Shutter control function** - up to 2* shutters (e.g. shutters of sources or manipulators)
- Mobile solutions for remote access and control
- Customised menu options (for robust and effectivity)
- Support (easy firmware update via USB)

* for double DC module version, 1 shutter per channel

OPTIONS

- **Second DC module** available: **two resistive heating zones** with independent control, or one resistive heating zone with **higher output power** (90V, 17A or 45V, 30A)
- Analog I/O card for vacuum measurement (1 gauge)

TECHNICAL DATA

Supply voltage	100-130VAC/200-260 VAC, 50-60Hz (power consumption max 1600 W)
Resistive heating mode parameters	45 V, 17 A - standard; other versions on request
EB heating mode parameters	1000 V, 300 mA - standard; other versions on request
Temperature range	▪ **273.15 K - 2473.15 K** for type C thermocouple (dependent on sample holder type or evaporator) ▪ **73.15 K - 1645.15 K** for type K thermocouple ▪ **1.4 K - 500 K** for DT670/DT470 silicon diodes (dependent on sample holder type and conditions in chamber)
Temperature independent inputs	2 - for thermocouples K/C/E/N 2 - for silicon diodes DT670/DT470
Temperature setpoint ramp rate	adjustable from 0.1 K to 1000 K/ s|min|h
ΔT setpoint	0.1 to 5.0 K/s
Vacuum measurement (optional)	CTR90, TTR91, TTR211, PTR225, PTR90, ITR90, ITR100, Baratron, ANALOG IN, PG105, MG13/14, PKR251/360/361, PCR280, ATMION
Communication interface	RS232/485, Ethernet
Communication protocol	MODBUS-TCP
User interface	7" TFT display with touchscreen, digital encoder
Interface languages	English, German, Polish
Dimensions	448.8 × 132.5 × 375 mm (W×H×D), 19" rack mountable
Weight (approx.)	8.8 kg (for standard version)

APPLICATION

- Any thermal process according to the specifications
- Effusion cells supply
- Sample holders heating
- Thermal monitoring

SOFTWARE APPLICATIONS
FOR AUTOMATION AND CONTROLLING

DESCRIPTION

Manipulation and transferring systems can be fully software controlled and automated using PREVAC's electronics and dedicated software which have been developed in-house based on the latest innovation solutions combined with our unique vacuum experience.

synthesium

SYNTHESIUM

Synthesium is an innovative software tool optimized for easy and complete control over the entire deposition process and all components in the system.

It contains a convenient and intuitive graphical user interface and allows to operate system in two general modes:
- manual control of all system elements
- automated control by predefined recipes

Synthesium software is based on Tango technology and is extremely easy to extend with new hardware. All recipes and new hardware modifications can be done by using open-source tools or in python script. The vacuum deposition system is controlled by industrial standard PC with installed MySQL Database for all data. Synthesium can be installed and operated offline on a separate PC in system simulation mode. This is very useful when the user wants to prepare and test recipes.

- Status of elements like pumps, valves, sources, substrate etc. is represented by graphical modules that are coloured and animated
- Possibility to adjust parameters of all system components (MFC, valves, pumps, gauges, power supplies etc.)
- Possibility to create automatic process of sequences, including loops, subrecipes (macros), calibrations, pauses and many more
- Recipes can be extended with new subrecipes (macros) of any process within python script
- Recipes can be defined in Recipe Editor (XManager) by drag&drop operation or by loading from text file
- Password protected access rights using 1 of 9 levels (e.g. engineer, scientist, operator)
- Process data can be stored in archiver based on MySQL database
- Generation of text protocol files with all needed process information
- Remote access by VNC protocol

spectrium

SPECTRIUM

Spectrium is a control and data acquisition software dedicated to EA15 class analysers.

Spectrium, based on the latest developments in techniques and signal processing, is a progressive and optimized software tool for data acquisition and analytical instruments controlling, with very intuitive graphical interface.

Spectrium offers the possibility to define single independent regions as well as grouping them in sequences. Also nesting sequences in major sequences is supported. Measurements can be done in Fixed and Scan mode and in both cases while processing, measurement tools and FWHM display are available. In addition, not only a real-time view of the detector image in 3D as well as energy graph, but also a graph of the 2D detector image and the possibility to filter a chosen intensity range are at the user's disposal. Intensity graph is shown along geometry axis. In order to guarantee compatibility to existing software, data export to TXT, HDF5 and CasaXPS is available by default.

- Imaging, mapping & depth profiling - Spectrium is offering a package of pre-defined macros for easy experimental setup of these techniques
- Components control - software control of X-ray source, UV source, flood source, Ion source and manipulator
- Interactive scan control - software design has been optimized for more efficient workflow, resulting in a streamlined and simpler design. The control module is interactive and dynamic allowing adaptation of parameters to customer's needs
- High quality spectra - user can use the Spectrium software for many experimental techniques for any research. It can measure high quality spectra
- Direct export to CasaXPS - possibility to directly export whole recipe data to CasaXPS with one click
- Integration with TANGO and other control systems
- Integration with LabView examples
- Configurable device window
- Multiple views
- Saving user window configuration
- Advance Access Levels Management - provide limited access to particular features for analyzer's setup and control for specified user groups according to their knowledge
- Multiple detector support - the software is able to acquire data from MCP/CCD, Channeltron and Delayline type detectors

LASER HEATING FOR UHV & HP APPLICATIONS

DESCRIPTION

The laser beam is guided by fiber optics close to the sample holder. Temperature of the sample is controlled by close loop HEAT3-PS solution. Temperature measurement is provided by thermocouple or pyrometer.

TECHNICAL DATA

Wavelength	808 nm (+/- nm)
Fiber core diameter	400 µm
Fiber connector	SMA905
Fiber length	5 m
Max. power	350 W

APPLICATIONS

- UHV spectroscopy systems
- UHV deposition system
- Ambient pressure spectroscopy systems (e.g. HPXPS)
- Ambient pressure deposition systems (e.g. PLD)

DESCRIPTION

Compact size laser source for fast & effective sample heating with positioner. Source is powered and controlled by HEAT3-PS Power Supply.

TECHNICAL DATA

Wavelength	976 nm
Beam diameter	Ø 3 -10 mm (adjustable)
Mounting flange	DN 40CF
Max. power	200 W

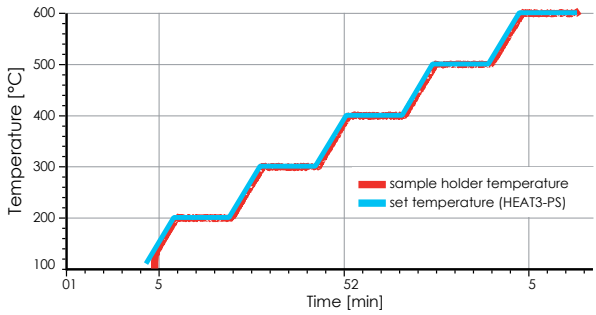

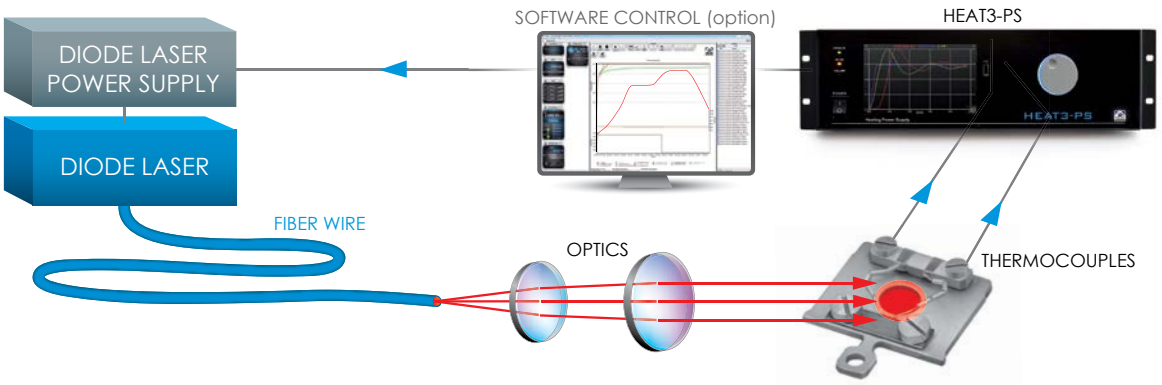

The multi-axes manipulator Information list is provided to guide you through the configuration process and to help you choose the modules that, when combined, result in the manipulator best suited to your individual application.

Z TRAVEL

☐ 0 mm (XY only)	☐ 75 mm	☐ 100 mm	☐ 125 mm	☐ 150 mm	☐ 175 mm	☐ 200 mm	☐ 225 mm
☐ 250 mm	☐ 275 mm	☐ 300 mm	☐ 325 mm	☐ 350 mm	☐ 375 mm	☐ 400 mm	☐ 425 mm
☐ 450 mm	☐ 475 mm	☐ 500 mm	☐ 525 mm	☐ 550 mm	☐ 575 mm	☐ 600 mm	☐ 625 mm
☐ 650 mm	☐ 675 mm	☐ 700 mm	☐ 725 mm	☐ 750 mm	☐ 775 mm	☐ 800 mm	☐ ..other.. mm

MOUNTING FLANGE

☐ DN 100CF ☐ DN 160CF ☐ DN ....other....CF

TRAVELING FLANGE

☐ DN 100CF ☐ DN 160CF ☐ DN .....CF

MOUNTING ATTITUDE

☐ Vertical ☐ Horizontal ☐ .....other.....

A2 LENGTH

☐ ..... mm

XY TRAVEL

☐ 0 mm (Z only) ☐ ±12.5 mm ☐ ±25.0 mm

☐ .....other..... mm

ROTATION

☐ R1 ☐ R2 ☐ R3

☐ Differentially pumped rotary feedthrough

MOTORISATION

☐ X axis ☐ Y axis ☐ Z axis

☐ R1 ☐ R2 ☐ R3

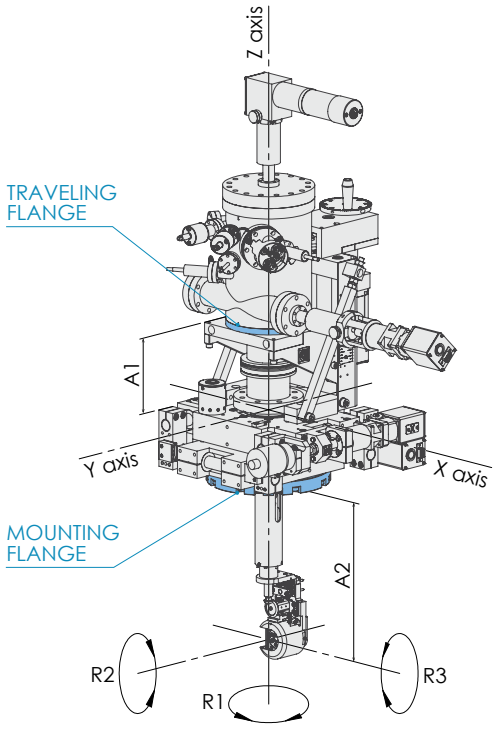

THERMOCOUPLES

☐ Type K ..... pairs ☐ Type C ..... pairs

☐ Type E ..... pairs ☐ .....other type..... pairs

SAMPLE HOLDERS

☐ Standard PTS ☐ Special PTS .....

☐ Flag style .....

☐ Plate style .....

☐ .....other.....

HEATING

☐ up to ..... °C

COOLING

☐ down to ..... K

APPLICATION

Please describe: .....

.....

.....

OTHER REQUIREMENTS

Please describe: .....

.....

.....

.....

view interactive form

PRECISION AND VACUUM TECHNOLOGY

PREVAC sp. z o.o.
Raciborska Str. 61
PL44362 Rogów

sales@prevac.eu
+48 32 459 21 30
+48 32 459 20 01

www.prevac.eu

Local Contact: